This is a digital copy of a book that was preserved for generations on library shelves before it was carefully scanned by Google as part of a project to make the world's books discoverable online.

It has survived long enough for the copyright to expire and the book to enter the public domain. A public domain book is one that was never subject to copyright or whose legal copyright term has expired. Whether a book is in the public domain may vary country to country. Public domain books are our gateways to the past, representing a wealth of history, culture and knowledge that's often difficult to discover.

Marks, notations and other marginalia present in the original volume will appear in this file - a reminder of this book's long journey from the publisher to a library and finally to you.

Usage guidelines

Google is proud to partner with libraries to digitize public domain materials and make them widely accessible. Public domain books belong to the public and we are merely their custodians. Nevertheless, this work is expensive, so in order to keep providing this resource, we have taken steps to prevent abuse by commercial parties, including placing technical restrictions on automated querying.

We also ask that you:

+ *Make non-commercial use of the files* We designed Google Book Search for use by individuals, and we request that you use these files for personal, non-commercial purposes.

+ *Refrain from automated querying* Do not send automated queries of any sort to Google's system: If you are conducting research on machine translation, optical character recognition or other areas where access to a large amount of text is helpful, please contact us. We encourage the use of public domain materials for these purposes and may be able to help.

+ *Maintain attribution* The Google "watermark" you see on each file is essential for informing people about this project and helping them find additional materials through Google Book Search. Please do not remove it.

+ *Keep it legal* Whatever your use, remember that you are responsible for ensuring that what you are doing is legal. Do not assume that just because we believe a book is in the public domain for users in the United States, that the work is also in the public domain for users in other countries. Whether a book is still in copyright varies from country to country, and we can't offer guidance on whether any specific use of any specific book is allowed. Please do not assume that a book's appearance in Google Book Search means it can be used in any manner anywhere in the world. Copyright infringement liability can be quite severe.

About Google Book Search

Google's mission is to organize the world's information and to make it universally accessible and useful. Google Book Search helps readers discover the world's books while helping authors and publishers reach new audiences. You can search through the full text of this book on the web at `http://books.google.com/`

Dette er en digital kopi af en bog, der har været bevaret i generationer på bibliotekshylder, før den omhyggeligt er scannet af Google som del af et projekt, der går ud på at gøre verdens bøger tilgængelige online.

Den har overlevet længe nok til, at ophavsretten er udløbet, og til at bogen er blevet offentlig ejendom. En offentligt ejet bog er en bog, der aldrig har været underlagt copyright, eller hvor de juridiske copyrightvilkår er udløbet. Om en bog er offentlig ejendom varierer fra land til land. Bøger, der er offentlig ejendom, er vores indblik i fortiden og repræsenterer en rigdom af historie, kultur og viden, der ofte er vanskelig at opdage.

Mærker, kommentarer og andre marginalnoter, der er vises i det oprindelige bind, vises i denne fil - en påmindelse om denne bogs lange rejse fra udgiver til et bibliotek og endelig til dig.

Retningslinjer for anvendelse

Google er stolte over at indgå partnerskaber med biblioteker om at digitalisere offentligt ejede materialer og gøre dem bredt tilgængelige. Offentligt ejede bøger tilhører alle og vi er blot deres vogtere. Selvom dette arbejde er kostbart, så har vi taget skridt i retning af at forhindre misbrug fra kommerciel side, herunder placering af tekniske begrænsninger på automatiserede forespørgsler for fortsat at kunne tilvejebringe denne kilde.

Vi beder dig også om følgende:

- Anvend kun disse filer til ikke-kommercielt brug
  Vi designede Google Bogsøgning til enkeltpersoner, og vi beder dig om at bruge disse filer til personlige, ikke-kommercielle formål.
- Undlad at bruge automatiserede forespørgsler
  Undlad at sende automatiserede søgninger af nogen som helst art til Googles system. Hvis du foretager undersøgelse af maskinoversættelse, optisk tegngenkendelse eller andre områder, hvor adgangen til store mængder tekst er nyttig, bør du kontakte os. Vi opmuntrer til anvendelse af offentligt ejede materialer til disse formål, og kan måske hjælpe.
- Bevar tilegnelse
  Det Google-"vandmærke" du ser på hver fil er en vigtig måde at fortælle mennesker om dette projekt og hjælpe dem med at finde yderligere materialer ved brug af Google Bogsøgning. Lad være med at fjerne det.
- Overhold reglerne
  Uanset hvad du bruger, skal du huske, at du er ansvarlig for at sikre, at det du gør er lovligt. Antag ikke, at bare fordi vi tror, at en bog er offentlig ejendom for brugere i USA, at værket også er offentlig ejendom for brugere i andre lande. Om en bog stadig er underlagt copyright varierer fra land til land, og vi kan ikke tilbyde vejledning i, om en bestemt anvendelse af en bog er tilladt. Antag ikke at en bogs tilstedeværelse i Google Bogsøgning betyder, at den kan bruges på enhver måde overalt i verden. Erstatningspligten for krænkelse af copyright kan være ganske alvorlig.

Om Google Bogsøgning

Det er Googles mission at organisere alverdens oplysninger for at gøre dem almindeligt tilgængelige og nyttige. Google Bogsøgning hjælper læsere med at opdage alverdens bøger, samtidig med at det hjælper forfattere og udgivere med at nå nye målgrupper. Du kan søge gennem hele teksten i denne bog på internettet på `http://books.google.com`

NYPL RESEARCH LIBRARIES
3 3433 06275120 5

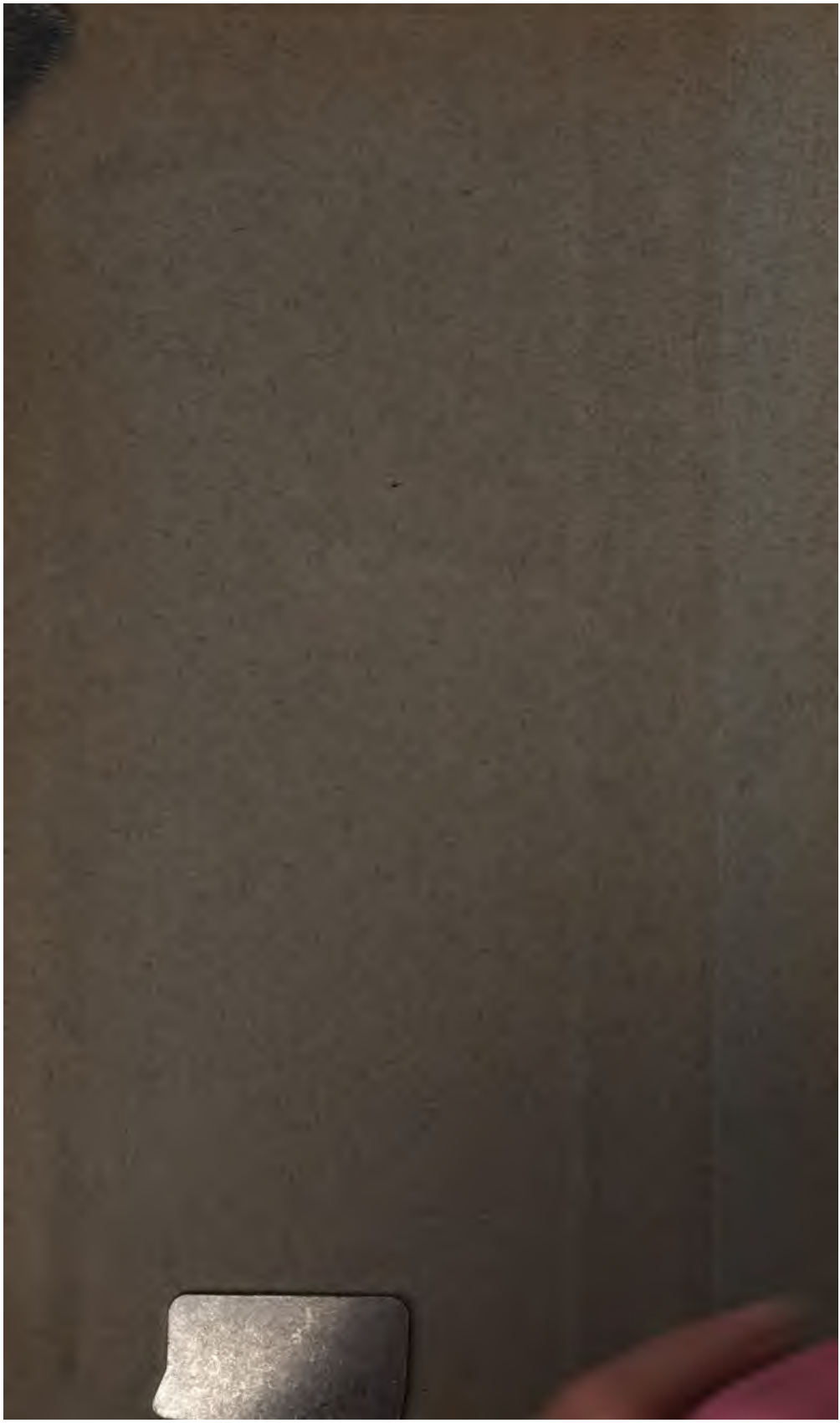

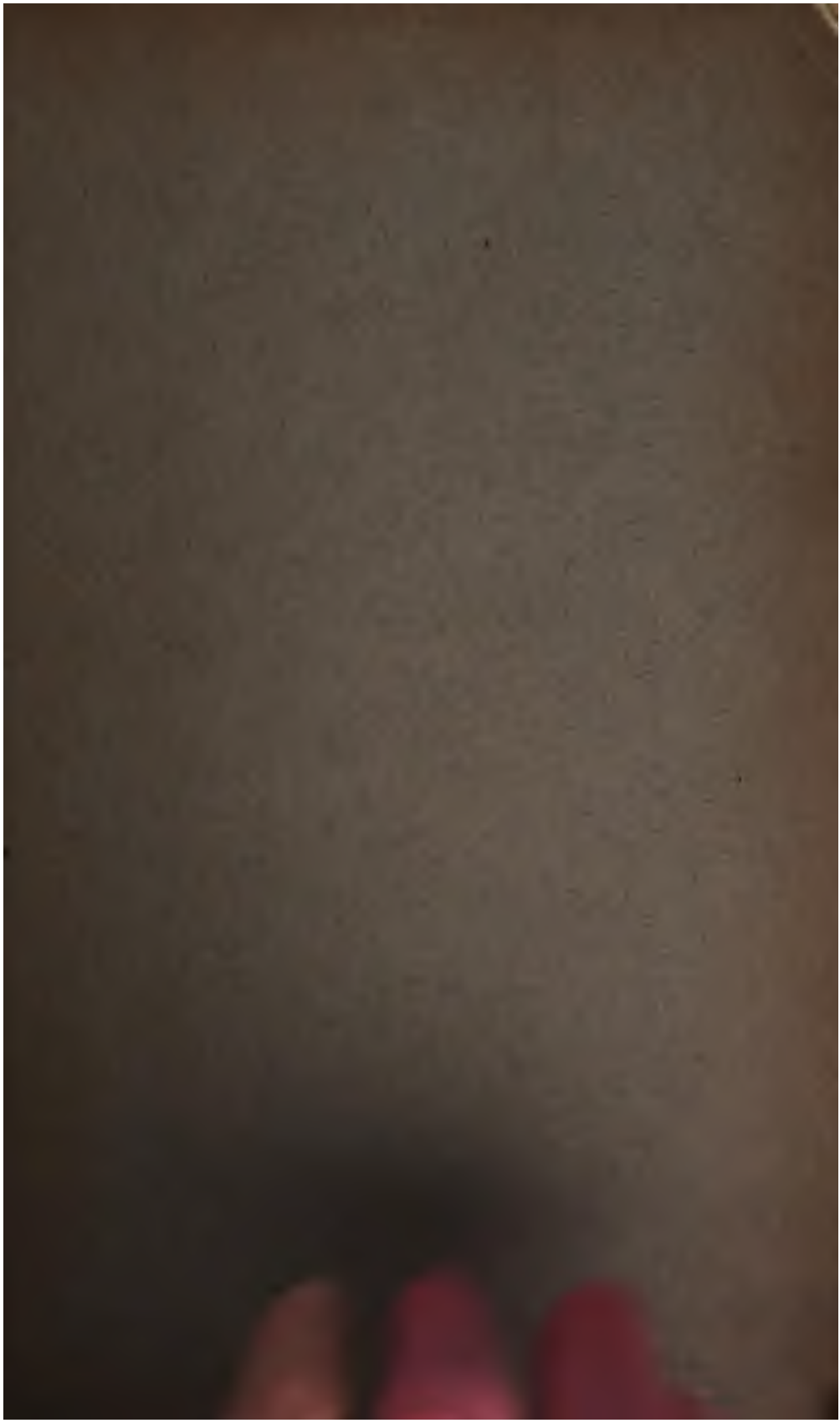

811644

Meddelelser om Grønland,

udgivne af

Commissionen for Ledelsen af de geologiske og geographiske Undersøgelser i Grønland.

Fire og tyvende Hefte.

Med 20 Tavler,
et særskilt heftet, farvetrykt Bilag
og en
Résumé des Communications sur le Grönland.

Kjøbenhavn.
I Commission hos C. A. Reitzel.
Bianco Lunos Bogtrykkeri.
1901.

Hos **C. A. Reitzel** faas følgende af Commissionen udgivne Skrifter:

Gieseckes mineralogiske Rejse i Grønland,

(Bericht einer mineralogischen Reise in Grønland, 1806—1813)
med biografiske Meddelelser om Giesecke
af **F. Johnstrup**,
samt et Tillæg om de grønlandske Stednavnes Retskrivning og Etymologi
af Dr. **H. Rink.**
Med 3 Kort. 1878. Kr. 7.

Meddelelser om Grønland.

I. Undersøgelser i Godthaabs og Frederikshaabs Distrikter (Indlandsisen) i 1878 ved **Jensen, Kornerup, Lange** og **Hoffmeyer.** Med 6 Tavler og 3 Kort. 1879. Andet Oplag. 1890. Kr. 6.

II. Undersøgelser i Julianehaabs (Sandstenen og Syeniten), Holstensborgs og Egedesmindes Distrikter i 1876 og 1879 ved **Steenstrup, Kornerup, Jensen, G. Holm** og **Lorenzen.** Med 8 Tav. 1881. Kr. 6. Udsolgt.

III. Conspectus Florae Groenlandicae. 1ste og 2den Afdeling: Fanerogamer og Karsporeplanter ved **Joh. Lange**; Grønlands Mosser ved **Joh. Lange** og **C. Jensen.** 1880—87. 3die Afdeling: Lichener, Svampe og Havalger, samt Tillæg til Fanerogamer og Karsporeplanter ved **Deichmann Branth, Grønlund, Kolderup Rosenvinge** og **Rostrup** med 2 Tavler og 3 Kort. 1887—94. Kr. 14.

IV. Undersøgelser i Jakobshavns, Ritenbenks, Umanaks og Upernivíks Distrikter samt paa Øen Disko (Isbræer, Basalt og tellurisk Jern) i 1878—80 ved **Hammer, Steenstrup** og **Lorenzen.** Med 7 Tav. og 1 Kort. 1883. Andet Oplag. 1893. Kr. 6.

Meddelelser om Grønland.

Meddelelser om Grønland,

udgivne af

Commissionen for Ledelsen af de geologiske og geographiske Undersøgelser i Grønland.

24

Fire og tyvende Hefte.

Med 20 Tavler,
et særskilt heftet, farvetrykt Bilag
og en
Résumé des Communications sur le Grönland.

Kjøbenhavn.
I Commission hos C. A. Reitzel.
Bianco Lunos Bogtrykkeri.
1901.

THE NEW YORK
PUBLIC LIBRARY
811644
ASTOR, LENOX AND
TILDEN FOUNDATIONS
R 1916

Indhold.

Side

I. Undersøgelser af Mineraler fra Julianehaab indsamlede af G. Flink 1897. Af **G. Flink, N. B. Boggild** og **Chr. Winther** med indledende Bemærkninger af **N. V. Ussing.** (Hertil Tavle I—VIII og et Skitsekort mærket IX) . . . . . 1.

II. Untersuchungen an den eisenführenden Gesteine der Insel Disco von Dr. **Th. Nicolau** . . . . . 215.

III. Beretning om en Undersøgelsesrejse til Øen Disko i Sommeren 1898 af **K. J. V. Steenstrup.** (Hertil Tavle IX—XX samt et farvetrykt Bilag, særskilt hæftet) . . . . . 249.

IV. Résumé des Communications sur le Grönland . . . . . 307.

I.

Undersøgelser

af

Mineraler fra Julianehaab

indsamlede af G. Flink 1897.

Af

G. Flink, O. B. Bøggild og Chr. Winther

med indledende Bemærkninger af

N. V. Ussing.

1899.

Kommissionen for Ledelsen af geologiske og geografiske Undersøgelser i Grønland rettede ved Nytaar 1897 en Opfordring til Undertegnede om at fortsætte de tidligere paabegyndte Undersøgelser af Nefelinsyenit-Omraaderne i Julianehaab-Distrikt. Forskellige Omstændigheder medførte, at jeg maatte opsætte Arbejdet nogle Aar, og da der kort efter fremkom et Tilbud fra Mineralogen Hr. G. Flink i Stockholm om for Kommissionen at foretage en mineralogisk Indsamlingsrejse i Julianehaab-Distrikt, besluttede man at modtage dette Tilbud for derigennem at udvide Kendskabet til Mineralforekomsterne og samtidig skabe et bredere Grundlag for senere geologiske Undersøgelser.

De store Forventninger, hvormed man imødesaa Resultaterne af en saa udmærket Samlers Arbejder, bleve endog overtrufne. Ved sin Tilbagekomst i Efteraaret 1897 medbragte Hr. Flink et forbavsende rigt og videnskabelig betydningsfuldt Materiale. I den Redegørelse for Rejsens Resultater, som findes offentliggjort i «Meddelelser om Grønland», Vol. XIV, paapeger Hr. Flink ikke mindre end 30 Mineralspecies og Mineralvarieteter, som han efter den foreløbige Undersøgelse maatte anse for ny, og af hvilke en meget stor Del forelaa i tilstrækkelig Kvantitet til en fuldstændig Undersøgelse.

Efter Kommissionens Bestemmelse blev alt det indsamlede Materiale overgivet til Universitetets Mineralogiske Museum i Kjøbenhavn.

De Mineraler, som Hr. Flink har samlet i Julianehaab-Distrikt, hidrøre fra to i paragenetisk og geologisk Henseende forskellige Forekomster. Den første af dem repræsenteres af de gammelkendte Mineralfindesteder 10—20 eng. miles NNV. for Kolonien Julianehaab. Det er disse, som i Haandbøgerne i Reglen betegnes med Fællesnavnet *Kangerdluarsuk* (et Navn, som dog egentlig kun tilkommer en begrænset Del af det paagældende Omraade), og som allerede for omkring 100 Aar siden berigede Videnskaben med adskillige ny Mineraler (Eudialyt, Sodalit, Arfvedsonit). Da de systematiske Undersøgelser i Grønland i 70'erne bleve paabegyndte, blev særlig Opmærksomhed skænket «Kangerdluarsuk»-Forekomsterne; igen bleve flere helt ny Mineraler fundne (Rinkit, Steenstrupin og Ainigmatit, hvilken sidste dog allerede tidligere var iagttaget, men ikke undersøgt), og mange før fundne Mineraler bleve fuldstændigere kendte. I geologisk Henseende ere de Forekomster, hvorom det her drejer sig, næsten udelukkende Nefelinsyenit-Pegmatitgange.

Den anden Forekomst gav Hr. Flink det største og interessanteste Udbytte. Det er Lokaliteten *Narsarsuk* (Narsasik), som ligger ca. 35 eng. miles NV. for Kolonien Julianehaab. Denne Lokalitet blev først bekendt gennem Hr. K. J. V. Steenstrups Rejse 1888. Han medbragte derfra ejendommelige Varieteter af Feldspat (Kryptopertit), af Krokydolit, Sodalit, Eudialyt, Kvarts o. a., som delvis ere beskrevne i «Meddelelser om Grønland» Vol. XIV; af Mineralerne droges den Slutning, at det her drejer sig om en til Augitsyenit knyttet Mineralforekomst. I senere Indsamlinger, som skyldtes Eskimoer i Julianehaab-Distrikt, opdagedes Neptunit, Epididymit o. a. ny Mineraler, af hvilke de fleste ere beskrevne 1894 af Hr. Flink i «Zeitschrift für Krystallographie». At ogsaa disse Mineraler stammede fra Narsarsuk blev formodet af Hr. Steenstrup og endelig fastslaaet ved Hr. Flinks Rejse i 1897.

For at man nu uden alt for stor Opsættelse kunde forelægge de væsentligste af de videnskabelige Resultater, som den

udførlige Bearbejdelse af Hr. Flink's Indsamlinger kunde give, deltes Arbejdet, saaledes at Hr. Flink selv overtog Bearbejdelsen af alt fra *Narsarsuk*-Forekomsten stammende Materiale alene med Undtagelse af Feldspaterne, hvis Undersøgelse maatte ønskes udført i Tilslutning til den ovennævnte Bearbejdelse af de tidligere indsamlede Feldspater sammesteds fra.

Resultatet af Hr. Flink's Undersøgelser vil man finde i den nærmest følgende Afhandling i nærværende Hefte.

Den anden Del af Indsamlingerne, d. e. Mineralerne fra *Kangerdluarsuk* og de dermed sammenhørende Lokaliteter, blev det overdraget mig at foranstalte undersøgt paa Mineralogisk Museum i Kjøbenhavn. Den hidtil fuldendte Del af disse Undersøgelser er meddelt efter Hr. Flink's Afhandling og angaar tre helt ny Mineraler (Britolit, Schizolit, Epistolit) og et tidligere bekendt (Steenstrupin).

Universitetets Mineralogiske Museum.
Kjøbenhavn, d. 24. April 1899.

N. V. Ussing.

Part I.

On the Minerals

from Narsarsuk on the Firth of Tunugdliarfik in Southern Greenland

by

Gust. Flink.

Introduction.

In the summer of 1897 I visited South Greenland in order to make mineralogical investigations, with which I had been charged by the Commission for conducting the geological and geographical exploration of Greenland («Commissionen for Ledelsen af geologiske og geografiske Undersøgelser i Grønland»). An account of this visit was published in «Meddelelser om Grønland» [1]).

As far as hitherto known, the rocks of South Greenland, taken as a whole, are gneiss and granite of uniform character and poor in minerals. Only the syenite regions adjoining the Firths of Tunugdliarfik and Kangerdluarsuk in the vicinity of Julianehaab form an exception in this respect, being very rich in rare minerals. These regions formed the principal objects of my investigations during my visit to the country, and from thence I brought home rich collections of minerals, several of them new to science.

Among the numerous mineral occurrences in these syenite regions, that of Narsarsuk holds the first place with regard both to the number and the nature of the minerals. A description of the minerals collected on Narsarsuk is given in the following pages. First, however, a few words may be said about the locality.

[1]) Vol. XIV, pages 221—262.

Narsarsuk, the name of which in the Esquimaux language is said to signify «the Great Plain», lies between the inner part of the Firths of Igaliko and Tunugdliarfik. The nearest place inhabited by Greenlanders is Igaliko on the firth of the same name. If, setting out from this place, one wants to visit the mineral locality, one first has to travel from the northern end of the firth in a northerly direction, traversing a ground covered with gravel and but little elevated above the surface of the firth. Across this gravelly plain runs a tolerably large stream, coming from the valley between the mountains of Iganek and Igdlerfigsalik. The gravel consists chiefly of decomposition products washed down from the sloping sides of these mountains. After about half an hour's walk from the firth in the direction mentioned above a steep mountain wall 300 metres in height is reached, after ascending which one stands on Narsarsuk.

Narsarsuk forms a fairly level plateau, extending two or three kilometres from north to south with a breadth of somewhat more than a kilometre. To the north-east of this plateau rise the mighty mountain masses of Igdlerfigsalik, from which it is separated by a saddle-shaped valley with a water-parting in its midst. In the southern part of this valley the water runs towards the south, joins the above-mentioned water-course and flows through the gravelly plain into the Firth of Igaliko. In the northern part of the valley a rapid stream (which also takes its rise on Igdlerfigsalik) rushes northward to Tunugdliarfik. On the south-west the plateau of Narsarsuk borders a somewhat irregular depression with a couple of small lakes. The southern lake, which is the larger one, drains its waters into the Firth of Igaliko by means of a small river running through the gravelly plain, where it joins the first mentioned water-course. The waters of the northern lake are discharged into the Firth of Tunugdliarfik. To the south-west of the depression the ground again rises forming a mountain mass named Iliortarfik,

which to the south-west, slopes towards Itivdlersuak, the low stretch of ground across which the traffic between Igaliko and Tunugdliarfik is carried on. To the south the plateau, as has already been mentioned, descends abruptly to the gravelly plain, and to the north-west it slopes very steeply down towards the Firth of Tunugdliarfik.

The prevailing rock in this area is syenite; on the southern, western and northern borders, however, there is granite. All around, the granite dips below the syenite and seems to form a basin-shaped depression, which has been filled with syenite. At the contact the granite is quartzite-like, white and very fine-grained to almost compact. This contact zone is in many places fairly broad. The syenite, on the contrary, seems to be of the same character close to the line of contact as in the central parts. It is somewhat coarse-grained and highly subject to weathering; its surface is almost everywhere covered with a more or less thick layer of gravel. It is not probable that this disintegration is due to the hornblende being first decomposed, for the amphibole individuals that are found among the gravel look as fresh as the feldspar grains. Portions of more resisting rock protrude here and there through the layers of disintegrated rock, looking at a distance like old walls or ruins. On their upper surfaces tolerably well preserved striæ may sometimes be seen, dating from the age in which the inland ice reached this point. The gravel resulting from the weathering of the syenite seems quite unfit for the forming of vegetable soil. Where this gravel occurs, therefore, vegetation is almost totally absent.

The small lakes mentioned above lie along the line where the granite and syenite meet. Wholly within the syenite area lie two other lakes or pools of still less extent; one in the immediate vicinity of the mineral locality, the other a little to the east of it. Both dry up during the latter part of the summer.

The locality where the rare minerals have been found, is situated at the northern extremity of the plateau of Narsarsuk, at a very short distance from the steep descent towards Tunugdliarfik, just where this firth sends out its branch, Korok. As shown by Plate IX, it occupies but a small area; the distance between the southernmost point where the minerals were found, No. 13, and the northernmost, No. 8, being scarcely half a kilometre, and the breadth from east to west amounting to little more than 100 metres. Outside this small area no mineral of rare occurrence has been found on the plateau of Narsarsuk. Everywhere else the rock is of uniform grain, and pegmatite occurs only in this area. At this locality, as throughout the plateau, the rock is highly weathered or split into pieces of varying size. Most of the minerals hitherto collected here have been found among this loose material that covers the ground.

This isolated locality of minerals is evidently not a contact formation, for it has no connection with the granite, and the parts of the syenite contiguous to that rock contain no uncommon minerals. Nor can it be regarded as a vein-formation. In the vicinity there certainly occur vein-like formations of a syenite distinguished from the usual type syenite by containing as chief ingredients minerals of the amphibole and pyroxene groups rich in iron, on account of which the rock of these veins is almost black in colour. But these vein-like segregations have no visible relation to the pegmatite formations in which the rare minerals occur.

The pegmatite formations within the area where the minerals occur are extraordinarily numerous, but, as a rule, the extent of each separate formation is rather inconsiderable. Their form is very irregular. In general they may be designated as more or less spherical; they do not extend so as to form veins or layers. The chief minerals are microcline and ægirine, which often occur as very large crystal individuals. The crystals penetrate without a regular limit into the normally-grained rock,

which shows that the pegmatite is of primary origin i. e. formed simultaneously with the main mass of the rock. In this first stage of mineral formation the primary minerals, felspar and ægirine have in most cases grown so as to meet, leaving no open space between them. But nearly as often the formation of the these minerals has been interrupted, before the space between them had been filled; in such cases open drusy cavities have been the result. In these cavities a number of new minerals have then formed during successive generations. Thus a great number of the pegmatite formations met with italics on the Narsarsuk plateau are quite solid and consist entirely of coarse crystalline masses of the primary minerals. But in other places numerous open drusy cavities are met with, the walls of which are frequently lined with crystals representing later stages of formation. The locality has as yet been very little worked for minerals, and the drusy cavities that have been found have all been small. To judge, however, from the considerable size of many crystals found among the loose gravel, very large cavities must have existed in the parts of the rock which have weathered into gravel. The spaces between the more recent crystals are usually quite open. Sometimes they are filled with a black, earthy substance containing a large percentage of manganese. Lastly, several drusy cavities have been filled with some hard mineral substance as eudialyte, fluorite, calcite, etc.

All the minerals found on Narsarsuk in a quantity large enough to allow of a tolerably satisfactory investigation will be included in the following description. Only the feldspars are excluded, because they are to be examined and described, together with other Greenland feldspars, by another mineralogist. Most of the new minerals have been found in small quantities, on account of which the analyses, mostly very difficult, have in many cases been made on very scanty material. This difficult and important work could, however, thanks to the great kindness and liberality of Professor Hj.

Sjögren, be placed in the most competent hands. Most of the analyses, and among them those offering the greatest difficulties, have been made in the laboratory of Professor Sjögren by his chemical assistant, the eminent analyst Dr. R. Mauzelius. For the valuable and liberal assistance thus afforded I desire to express my hearty thanks to the these gentlemen. Also to Baron De Geer, Professor of the University of Stockholm and Curator of the Mineralogical Institution, who has permitted me to perform the experimental part of my own work at the Institution, my warmest acknowledgements are due.

As to the names of the special forms within the different crystal classes, the nomenclature lately proposed by Groth [1]) is exclusively made use of in the present paper. For the designation of the forms, Miller's indices are employed except as regards the trigonal system, where the indices of four figures suggested by Bravais have been used, as, of course, also for the hexagonal system. The symbols of Naumann have been omitted as quite unnecessary. As for the optical characters of the minerals the views advanced by Fletcher [2]) have been adopted.

---

[1]) P. Groth, Physikalische Krystallographie; dritte Auflage 1895.
[2]) Mineralogical Magazine Vol. IX p. 278.

1. Graphite.

The only chemical element that has been found as a mineral on Narsarsuk, is carbon in the form of graphite. It occurs here in two different forms, partly as (apparently) compact masses, partly as isolated crystalline plates.

The compact masses of graphite were found at the locality No. 2 in loose specimens consisting of grey feldspar and ægirine, both in large, irregular individuals, the graphite occurring in extended layers up to 1^{cm} in thickness. The colour of the graphite is lead-grey, and the mineral is soft to the touch and easily soils the fingers. On closer inspection the compact portions are found to consist entirely of lamellæ matted together, partly aggregated quite irregularly, and partly arranged in parallel position or radially round enclosed grains of feldspar or ægirine.

At the locality No. 1 the graphite occurs associated with elpidite and the new mineral tainiolite. It is in this place developed as minute crystalline plates implanted on crystals of the accompanying minerals. Under the microscope these tables present a somewhat imperfect hexagonal outline. They are thickest in the centre and thin out lenticularly towards the edges. Distinct crystalline faces have not been observed.

The mode of occurrence of the graphite indicates that it must be one of the most recently formed minerals.

2. Galenite.

Only two sulphides have been found on Narsarsuk, namely galenite and sphalerite, both of them very sparingly. Galenite

was met with at the locality No. 4, partly as crystals, and partly as small masses of irregular form. The crystals are indistinctly developed and show only the faces of the cube, which are always uneven and dull. The irregular galenite masses seem to have been subject to some decomposing process. They are surrounded by a zone consisting of a yellowish brown, earthy decomposition product, which, at least partially, may consist of minium. Internally the irregular grains as well as the crystals are quite fresh and display on the cleavage planes the characteristic metallic lustre.

3. Sphalerite.

This sulphide is of still rarer occurrence on Narsarsuk than galenite. It has been observed only on a single specimen found at the locality No. 2. The associated minerals on the specimen are epididymite, elpidite, polylithionite and other minerals common at this locality. The sphalerite occurs in irregular grains of the size of a pea, on which traces of crystal outlines are sometimes observable. The grains are rather strongly corroded so as not quite to fill the cavities in which they are found. They are surrounded by an ochreous substance which is the result of the decomposition of the mineral. The mineral has a clear, resin-brown colour and very distinct cleavages.

4. Fluorite.

This mineral is one of the most common on Narsarsuk and has been found at most of the localities there, though only in small quantities. It occurs massive as well as in crystals. Massive fluorite is at many of the localities the last substance filling the spaces between crystals of other minerals, as zircon, ægirine etc. It is violet-red to colourless. Spots of deep colour often occur in a generally colourless mass of the mineral. The octahedral cleavages are very distinct.

The crystals of fluorite are generally small in size, little more than $^1/_2{}^{cm}$ in diameter. They are bluish-grey, sometimes pale green in colour and in the fresh state presenting sharp edges and corners, and plane and brilliant faces. The predominant form is the rhombic dodecahedron, which is often the only one present. Cubic faces are subordinate, and still more rarely octahedral faces. Well-developed crystals have been found especially at the localities Nos. 2 and 8. In the crystal druses the fluorite individuals always are the outermost, which indicates that they are the last formed. On specimens that have been long exposed, the crystals are more or less rounded by atmospheric action. Also the massive fluorite under the same conditions is in a state of much advanced decomposition. One can see how the decomposition has proceeded along the cleavages.

5. Quartz.

That the mineral occurrences in the syenite of South Greenland present important analogies with those of Langesund in Norway, is a fact which has frequently been pointed out. This agreement has chiefly or rather exclusively been stated with reference to the sodalite-syenite district between and about the Firths of Kangerdluarsuk and Tunugdliarfik, as it is chiefly this district that has hitherto been investigated. Now the fact is, that this Greenlandian syenite district consists, like the Norwegian locality, of basic rocks with no trace of quartz. The great syenite area about Igdlerfigsalik, on the other hand, has till now been almost unknown, and is, as far as regards its petrography, still so. It will, however, probably prove to be of a different character from that of the neighbouring sodalite-syenite district. This is at least indicated by the mineral occurrences on the plateau of Narsarsuk, which, in contra-distinction to the above-mentioned, are fairly rich in quartz.

It is true that this mineral seems to be one of the latest formed, but it is, however, very characteristic of the locality.

Almost all the mineral localities on Narsarsuk contain quartz associated with feldspar and ægirine. The mineral occurs both massive and in crystals. The massive quartz frequently fills the spaces between crystals of other minerals. It is greyish, colourless or milk-white.

Crystallized quartz is very common on Narsarsuk, and the crystals are sometimes fairly large. Crystals measuring a decimetre in diameter have been observed; such crystals are, however, generally imperfectly developed. The crystals are in most cases clear and colourless, sometimes white and opaque. Also some fragments of smoky brown colour have been found. Other tints have not been observed.

On the larger individuals occur only the most simple forms viz.

$$m = \{10\bar{1}0\},\ r = \{10\bar{1}1\},\ \text{and}\ z = \{01\bar{1}1\}$$

The two opposite rhomhohedrons are generally nearly equally developed; in most cases, however, the positive and the negative form are recognizable by the relative size of the faces.

The trigonal bipyramid, $s = \{2\bar{1}\bar{1}1\}$ is seldom quite distinct; but as natural etching figures often occur on the prismatic faces, it is generally possible to conclude from them whether a crystal is a right-handed or a left-handed individual. Most combination-edges present narrow truncations. As, however, these are not plane, but cylindrically curved, they are probably not to be regarded as original crystal planes, but as solution faces.

Also of the combination of faces the majority of the smaller crystals are as simple as those described above. Only on a few specimens from the locality No. 1 a small number of individuals were found which present some forms of rather uncommon occurrence. These crystals do not show the least trace of etching. They are as clear as water, and their faces

extremely smooth and brilliant. A few of them, which have been more closely examined, will here be described.

Crystal 1 (Fig. 1, Plate I) is 14^{mm} in length, 6^{mm} in thickness and, as usual, developed only at one end. It is a left-handed crystal, and shows the following forms:

$m = \{10\bar{1}0\}$, $r = \{10\bar{1}1\}$, $z = \{01\bar{1}1\}$, $s = \{2\bar{1}\bar{1}1\}$, $M = \{30\bar{3}1\}$, $v = \{71\bar{8}1\}$, and $B = \{80\bar{8}1\}$.

The prismatic faces below the positive rhombohedral faces are narrower than those below the negative. They are, all of them, without any striation. The positive rhombohedral faces are larger on an average than the negative. The lustre is the same on both. The bipyramid s is represented by two distinct faces, small, but very brilliant. The positive rhombohedron M is also represented by two faces, which are comparatively large. The trapezohedral form v is, strictly speaking, represented only by one determinable face, but on the back of the crystal (Fig. 1) there is a plane that probably also belongs to this form. It belongs to the same zone, but is strongly curved cylindrically round the zonal axis and gives on the goniometer an unbroken band of light extending over about 10 degrees. The values of the angles by which the forms M and v are determined, are as follows

	Measured.	Calculated.
$(30\bar{3}1) : (10\bar{1}0) =$	$14° 42'$	$14° 42'$
$(0\bar{3}31) : (0\bar{1}10) =$	$14° 41'$	
$(71\bar{8}1) : (1\bar{1}00) =$	$8° 48'$	$8° 52'$

The form B is fully determined by the zones $[71\bar{8}1 : 01\bar{1}0]$ and $[30\bar{3}1 : 10\bar{1}0]$. But the face is deeply striated parallel to the latter zone, and on the goniometer a large number of vicinal images are obtained, none of which is more distinct than the others.

Crystal 2 (Fig. 2, Plate I) is 6^{mm} in length and, like the last, a left-handed crystal. It shows the following forms

$m = \{10\bar{1}0\}$, $r = \{10\bar{1}1\}$, $z = \{01\bar{1}1\}$, $s = \{2\bar{1}\bar{1}1\}$, and $\pi = \{01\bar{1}2\}$,

The last-mentioned negative rhombohedron is one of the rarest forms of the quartz. On this crystal it is represented, as the figure shows, by two comparatively large faces. By its position as a symmetrical truncation of the combination-edge between two positive rhombohedral planes it is fully determined. I can also give the following values of angles.

	Measured.	Calculated.
$(01\bar{1}2) : (10\bar{1}0) =$	57° 34′	57° 35′
$(01\bar{1}2) : (1\bar{1}02) =$	55° 18′	55° 20′.

Crystal 3 (Fig. 3, Plate I) is also a left-handed individual of about the same size as the last. On it the following forms have been determined:

$m = \{10\bar{1}0\}$, $r = \{10\bar{1}1\}$, $z = \{01\bar{1}1\}$, $s = \{2\bar{1}\bar{1}1\}$, $M = \{30\bar{3}1\}$
$l = \{20\bar{2}1\}$, and $(a) = \{\bar{2}\bar{1}.9.12.7\}$.

Of the positive rhombohedron l only one very narrow face is present. However, it gives a distinct reflection on the gonimeter. Of the form (a) only a single face is present. It has deep, apparently irregular depressions and givis only a shimmering reflection. That it belongs to the zone $[30\bar{3}1, 01\bar{1}0]$ is obvious; its position in another zone could not be ascertained. It has, therefore, been determined through a shimmer-measurement of no great accuracy. The indices proposed are unusual for quartz, but no indices agreeing with previously known forms can be obtained, unless the zonal relations are given. As, however, only one face occurs, the form may, for the present, be regarded as somewhat uncertain.

	Measured.	Calculated.
$(20\bar{2}1) : (10\bar{1}0) =$	21° 37	21° 29′
$(\bar{2}\bar{1}.9.12.7) : (01\bar{1}0) =$	86° 36′	85° 39′

Crystal 4 (Fig. 4, Plate I) is a less distinct fragment (the top end) of a left-handed crystal. It shows the following forms:

$$m = \{10\bar{1}0\},\ r = \{10\bar{1}1\},\ z = \{01\bar{1}1\},\ s = \{2\bar{1}\bar{1}1\},\ \pi = \{01\bar{1}2\},$$
$$\text{and } (c) = \{\bar{1}54\bar{5}\}.$$

On the top all the three faces of the form π occur comparatively large. The form (c) has not, as far as I know, been observed before on quartz. It occurs as a negative right trapezohedron with two rather large faces. Also on crystal 3 it is represented by a narrow plane. It is remarkable, however, that on crystal 4 this form is represented as a left trapezohedron by one face. The crystal is probably not a twin; and it may, therefore, be supposed that both the right- and the left-handed forms occur. The faces are not, however, quite even; but they cannot be regarded as solution planes, because the crystal fragment shows no other traces of etching. The indices have been calcutated from the following angular value:

	Measured.	Calculated.
$\bar{1}54\bar{5} : 01\bar{1}1 =$	8° 58′	8° 46′.

The forms found on quartz from Narsarsuk are therefore the following.

$$m = \{10\bar{1}0\},\ r = \{10\bar{1}1\},\ l = \{20\bar{2}1\},\ M = \{30\bar{3}1\},\ B = \{80\bar{8}1\},$$
$$z = \{01\bar{1}1\},\ \pi = \{01\bar{1}2\},\ s = \{2\bar{1}\bar{1}1\},\ v = \{71\bar{8}1\},$$
$$(a) = \{\bar{2}1.\ 9.\ 12.\ 7\},\ \text{and } (c) = \{\bar{1}54\bar{5}\}.$$

The above lines contain an account of the occurrence of quartz on Narsarsuk partly massive filling the spaces between crystals of other minerals, and partly in regularly developed crystals. But the mineral occurs also in a third form, which is perhaps the most common, namely in individuals that have been so strongly attacked by solvents that one can no longer see whether they were originally idiomorphic crystals or massive lumps. The quartz crystals from Narsarsuk show all the stages of etching, from its appearance as a mere trace to the

total obliteration of the original form. In the first stage of the process the etching figures are very distinct. The rhombohedral faces seem to offer the greatest resistance against the decomposing agents. The pits etched in them remain for a long time few in number and of small size. They form isosceles triangles with their points turned downwards. (Fig. 5). They are conformable with the rhombehedral faces, but turned in the opposite direction. I have not found any difference between the etching figures on the positive rhombehedron and those on the negative one.

On the prismatic faces the etching proceeds much more energetically than on the rhombohedral faces. The pits on the prismatic faces are generally very large and distinct. They are wedge-shaped and arranged in relation to a prismatic combination-edge in such a manner that the wedges on both sides of it turn either their points or their bases towards the edge. The points of the etching figures are always turned towards the combination-edge at the end of which the form *s* occurs. Therefore these figures present a good means of distinguishing right-handed and left-handed crystals from each other. On the prismatic face wich is below the positive rhombehedron the points of the wedges on a right-handed crystal are turned to the right and on a left-handed crystal to the left. On the prismatic faces wich are below the negative rhombohedral faces the position of the etching figures is reversed. Also the twin formation appears most distinctly by the position of the etching figures.

Molengraaff has described [1]) natural etching figures on quartz crystals form Carrara which perfectly resemble those mentioned above.

As the process of corrosion proceeds, the etching figures grow larger and more numerous, till at last they meet,

---

[1]) Zeitschrift für Krystallographie, Vol. 14. p. 199.

leaving nothing of the original surfaces. This always takes place first on the prismatic faces. One often finds crystals on which the original prismatic faces have totally vanished, while the rhombohedral faces still keep their lustre and have only few etching figures. Simultaneously with the expansion of the etching figures the edges of the crystal are more energetically attacked. Under such circumstances the form of the crystal is quite destroyed, and the result is rounded lumps, which often resemble clear, brilliant hyalite concretions. Such pieces of quartz affected on all sides by solvents occur lying loose in large quantities on Narsarsuk.

6. Magnetite.

Of this mineral only a few pieces have been found on Narsarsuk. The place where they were found can not be exactly stated. The largest of the pieces is about the size of a pigeon's egg. Colour pure iron-black; sometimes, however, the mineral shows a bluish tarnish. Fracture conchoidal with metallic lustre. The powder is also of a pure black colour. It is dissolved in hydrochloric acid, leaving a slight residue, which becomes soluble by fusion with potassium bisulphate, and the solution becomes reddish yellow on the addition of hydrogen peroxide; the magnetite is therefore titaniferous.

The pieces found are for the most part bounded by irregular fractured surfaces, sometimes by surfaces where they have been attached to other minerals. Distinctly developed crystal planes occur only in exceptional cases. The prevailing form is the octahedron, the faces of which are deeply striated parallel to their common combination-edges. As usual with this mineral, the striation is due to the alternation of the faces of the octahedron and those of the rhombic dodecahedron. The latter form is also present as narrow truncations of the edges of the octahedron. These narrow faces are dull and uneven, whereas the faces of the octahedron

are tolerably bright. The hexahedral corners are somewhat rounded. Distinct cubic faces have not been observed.

7. Calcite.

Pure carbonates are somewhat rare on Narsarsuk. The most common is calcite, which, however, occurs very sparingly. On a specimen which was found lying loose among the gravel near the locality No. 7, the spaces between the aegirine crystals were filled with coarsely spathose calcite, of which, however, a good deal had weathered away, so that the aegirine crystals were in part laid bare. Usually the calcite on Narsarsuk occurs crystallized, though the crystals are always small in size. Crystals of four different types have been observed.

Crystals of the first type show the fundamental rhombohedron, generally alone (Fig. 9 Plate I). Sometimes also the hexagonal prism is present as a narrow truncation of the middle edges of the principal form. The crystals are generally only a few millimetres in diameter and occur as druses; but single individuals a centimetre or two in size have sometimes been observed. The faces are generally but faintly glimmering, and the crystals seem to be somewhat weathered superficially. This weathering has frequently followed the cleavages of the mineral, so that striations and furrows along them are distinctly observable. The crystals show a brownish tarnish, probably due to some manganiferous substance. Also their interior is usually not quite white, but shows a greyish or yellowish tint. Calcite crystals of this kind have been found chiefly at the locality No. 3.

Calcite crystals of the second type are acutely scalenohedral (Fig. 6, Plate I). They show only the positive scalenohedron

$$\varsigma = \{43\bar{7}1\}.$$

The faces of this form are rather uneven, so that exact measurements of angles are impossible. However, the form is fully determined by the following values

	Measured.	Calculated.
$(43\bar{7}1) : (7\bar{3}\bar{4}1) =$	50° 10′	49° 50′
$(43\bar{7}1) : (\bar{4}7\bar{3}1) =$	68° 25′	68° 22′.

These crystals are small and attain only 2—3^{mm} in length. They are of a yellowish grey or smoky brown colour. Crystals of this type have been met with only at the locality No. 2.

Crystals of the third type are generally somewhat larger than the foregoing types. They reach nearly 1^{cm} in length and show the following forms (Fig. 7, Plate I):

$$c = \{0001\},\ r = \{10\bar{1}1\},\ (\alpha) = \{35\bar{8}2\},\ (\beta) = \{08\bar{8}5\}.$$

As is seen from the figure, the scalenohedron (α) and the fundamental rhobohedral r predominate. The base and the negative rhombohedron (β), on the contrary, occur as very small faces. These faces are, however, very bright and smooth, while the planes of the fundamental rhombohedron have no lustre at all. As on the crystals of the first type, these faces have been affected by some solvent, which has made them quite dull and produced furrows parallel to the cleavages. The faces of the scalenohedral form, which are the largest on these crystals, are bright, but at the same time very uneven, so that the results of the measurements are not quite certain. The form is determined by the following angles.

	Measured.	Calculated.
$(35\bar{8}2) : (\bar{3}85\bar{2}) =$	41° 53′	
	41° 31′	
	42° 45′	
	40° 21′	
Mean	41° 38′	41° 46′
$(35\bar{8}2) : (85\bar{3}2) =$	72° 37′	72° 54′
$(35\bar{8}2) : (0001) =$	75° 5′	74° 47′.

This form has probably not been observed before on calcite. The corresponding positive scalenohedron, on the other hand, has been observed on crystals from Traversella, Alston Moor, and Ahrenthal [1]). The negative rhombohedron (β) is likewise now observed for the first time. It is determined by its position in the zones $[35\bar{8}2, \bar{1}101]$ and $[10\bar{1}1, \bar{3}8\bar{5}2]$.

The crystals belonging to this type are almost colourless and tolerably clear. They were found at the locality No. 2, but only in small numbers. On the same specimens there also occur small crystals of analcime, which are evidently of earlier formation than the calcite.

Calcite crystals of the fourth type have been observed only on a single specimen, which was found loose in the neighbourhood of the locality No. 5. These crystals (Fig. 8, Plate I) show exclusively the forms

$$c = \{0001\} \text{ and } f = \{02\bar{2}1\}.$$

As the forms are nearly equally developed, a crystal habit rather uncommon on calcite arises, the crystals assuming a certain resemblance to regular octahedra. The crystals were, indeed, at first regarded as belonging to the cubic system and supposed to be an unknown mineral. On a closer examination of the presumed new mineral, it, however, soon proved to be nothing but calcite. The crystals are only a millimetre or two in diameter. The planes are tolerably even, but not very bright, and have a brownish tarnish.

In digging at the locality No. 2, the medium-grained syenite, was found to be split by crevices of comparatively recent date. The walls of these crevices were lined with thin crusts of snow-white calcite, resembling on efflorescence. On these crusts no distinct crystal forms are observable. The surfaces are papillose and have a stalactitic appearance.

---

[1]) J. R. McD. Irby, Ref. Zeitschr. f. Kryst. Vol. 3 p. 617.

8. Rhodochrosite.

On the mineral specimens from Narsarsuk small black rhombohedral crystals resembling siderite crystals are not infrequently found; the black colour, however, indicates that they are not fresh. They are only 2—3^{mm} in size and generally irregularly grown together into druses. As to the combination of their faces they are of two kinds, partly such as show only the planes of the fundamental rhombohedron (Fig. 9, Plate I), and partly such as also show the prism of the second order (Fig. 1, Plate II). The former always have dull faces, sometimes they are curved and saddle-like. The latter, on the contrary, are generally rather bright so that they can be used for goniometer measurement. By a couple of such measurements the following values were obtained:

$$r : r = 75° 7' \text{ and } 75° 5'.$$

This is a rhombohedral angle somewhat larger than the one (74° 55′) adopted for calcite. But no great significance can be attached to the values found, as the rhombohedral faces are not quite even. In detaching these crystals from the specimens one finds them to consist externally of a very thin bright shell that breaks very easily. This shell encloses a black earthy mass. There is consequently no trace left of the original carbonate.

The other sort of crystals are so dull, that their faces give no reflexions at all. They, too, are often in their interior loose and earthy. Sometimes, however, they are of a somewhat firmer consistency, and traces of rhombohedral cleavages may be observed on them. Individuals have also been found fresh enough to allow of a tolerably accurate measurement of rhombohedral cleavage fragments. The following values were obtained:

$$r : r = 74° 13', \; 73° 46'.$$

The allied rhombohedral carbonates have the following rhombohedral angles.

Siderite 73° 0′
Smithsonite 72° 20′.

The earthy alteration products of these crystals give with soda and saltpetre on a platinum plate a strong reaction for manganese.

The freshest material that could be obtained was subjected to a partial analysis in order to ascertain the quantitative proportion between the iron and the manganese entering into the mineral. The material consisted of tolerably firm cleavage fragments, which, however, were quite black and soiled the fingers. The specific gravity was found to be = 3,666. The mineral was dissolved in hydrochloric acid with slight evolution of carbonic acid and a strong smell of chlorine. The values obtained are:

MnO	57,06
FeO	15,76
CaO	2,68
O, CO_2, H_2O	(24,50)
	100,00

In the fresh state these crystals have therefore probably consisted of carbonate of manganese with a large percentage of iron carbonate and some calcium carbonate. The process of alteration has been as follows: the mineral has given off carbon acid, the liberated manganous or ferrous oxide at the same time taking up oxygen and passing into higher degrees of oxidation, and by the absorption of water, hydrates have resulted. In most cases the alteration has proceeded so far that no trace of carbonate remains. The alteration products, chiefly «black manganese», probably have no constant composition; I have not, therefore, found it worth while to try to determine the degree of oxidation of the metals. The black

manganese, which soils everything that comes into contact with it, occurs frequently in the drusy cavities on Narsarsuk; as no other mode of origin of this substance can be indicated than its being due to the alteration of the rhodochrosite, this carbonate must have formerly occurred in considerable quantities.

9. Parisite.

The mineral parisite was discovered about 65 years ago in the emerald mines of the Muso valley, Colombia, South America, by J. J. Paris, the proprietor of the mines at that time. It was sent to Medici-Spada of Rome, who in 1835 gave it the name Musite from the locality. Afterwards, however, this name was changed for parisite after the discoverer. The mineral was first submitted to a closer investigation by R. W. Bunsen [1]). The material he had to examine consisted of one of the two pieces that had been sent to Medici-Spada. It was a crystal broken at both ends, 11^{mm} in breadth and 15^{mm} in thickness. On this material Bunsen made out, so far as the means of the time allowed, the chemical constitution as well as the crystallographical relations of the mineral and found it to be holohedral hexagonal.

The chemical composition was afterwards determined in accordance with more modern methods by Damour and Deville [2]). Des Cloizeaux [3]) came to the same conclusion as Bunsen with regard to the crystallographical character of the mineral; and he also found 13 new forms, more or less certain. He also gives tha indices of optical refraction that had been determined by Senarmont. Lastly Vrba [4]) has examined the mineral. His material consisted of a rather large number of crystal

---

[1]) Annalen d. Chemie u. Pharmacie 1845, Vol. 53, p. 147.
[2]) Comptes-Rendus 1864, Tom. 69, p. 270.
[3]) Manuel de Min. 1874, T. II, p. 162.
[4]) Zeitschr. f. Krystallographie 1889, Vol. 15, p. 210.

fragments and two entire, small, translucent crystals. From the angular values found by him and stated to be fairly accurate an axial ratio is calculated which deviates not a little from the one proposed by Bunsen (and Des Cloizeaux).

A related mineral from Övre Arö in the Langesundfjord, Norway, was investigated by Brögger[1]). The material for investigation was, however, so scanty and so intimately mixed with another mineral (Weibyeïte), that no analysis of it could be made. Neither could the crystallographic examination of it give a decisive result, as no forms occurred other than a hexagonal prism together with the base. But its optical and other physical characters agree with those of the parisite. As, therefore, this mineral cannot be with certainty regarded as parisite and as, further, the two varieties, hamartite[2]) from the Bastnäs mine, Riddarhyttan, Sweden, and Kyschtymparisite[3]) from a locality in the Ural mountains, are also too imperfectly known to be recognized as true parisite, the Muso valley was the only certain locality of this mineral, until G. Nordenskiöld[4]) found it in the «Lütze n Collection»[5]).

The material from Greenland that G. Nordenskiöld had at his disposal, was very scanty. For the analysis only 0,0966 gr. could be used, and the crystals on which he made the measurements of the angles, were very small and by no means of the best development. The result of his investigation, however, was to show that the Greenland mineral was really parisite. But while the South-American mineral is known only in the form of holohedral hexagonal crystals, Nordenskiöld found the Greenland mineral to be trigonal. The angular values obtained by him agree tolerably well with

[1]) Zeitschr. f. Kryst. 1890, Vol. 16, p. 650.
[2]) Öfvers. K. Vet. Ak. Handl. Vol. 25, p. 399.
[3]) Bull. Ac. St. Pet. Tome 4, p. 401.
[4]) Geol. Fören. Förh. 1894. Vol. 16, p. 338.
[5]) A collection of minerals from Narsarsuk partly described by the author in Zeitschrift f. Krypt. Vol. 23, 1864, pag. 344.

those found by Vrba, but owing to his confusing, somehow or other, the pyramids of the first and second order, he calculates one more axial ratio.

The material described by G. Nordenskiöld was found in only very small quantity, as has already been stated, in the Lütze collection. At the locality, however, it is by no means of rare occurrence. It is found there only crystallized, and the crystals are mostly rather small in size. Individuals measuring $1-2^{mm}$ in length and $0{,}5^{mm}$ in thickness are most common. These crystals are often grouped into loosely coherent aggregates which sometimes cover comparatively large portions of the surfaces of other minerals as aegirine and feldspar, and sometimes fill the spaces between the crystals of other minerals. Not infrequently, however, crystals 1^{cm} in length and thickness are met with. These larger crystals generally consist of a considerable number of smaller individuals grown together in parallel position. The largest crystal aggregation of this kind that has been found is 6^{cm} in length and 3^{cm} in thickness.

Like G. Nordenskiöld, I have found all crystals of this mineral that I have examined, of trigonal (rhombohedral) development. Holohedral hexagonal crystals, such as the parisite crystals from Muso are said to be, I have never found. All the crystal faces on the Greenland mineral, except the base, are more or less dull; on the goniometer they generally give only shimmering reflexions. They are, besides, almost always deeply striated horizontally, which also makes the results of the angular measurements uncertain. Therefore the values obtained by me can at the most only serve to identify some forms, but are hardly suitable for an accurate determination of the axial ratio. However, the better among the values found by me agree more with those found by Vrba than with the older ones of Bunsen and Des Cloizeaux, and therefore the axial ratio calculated by Vrba is given here also for the Greenlandi mineral:

$$a : c = 1 : 3{,}36456.$$

Referred to this system of axes, the 16 forms observed by me that could be determined with any degree of certainty, receive the following symbols:

$c = \{0001\}$, $m = \{10\bar{1}0\}$, $n = \{11\bar{2}0\}$, $i = \{1\bar{1}05\}$, $t = \{20\bar{2}9\}$, $u = \{2\bar{2}09\}$, $q = \{1\bar{1}02\}$, $r = \{20\bar{2}3\}$, $v = \{30\bar{3}4\}$, $y = \{3\bar{3}04\}$, $p = \{10\bar{1}1\}$, $s = \{40\bar{4}3\}$, $\alpha = \{30\bar{3}2\}$, $\beta = \{3\bar{3}02\}$, $\gamma = \{3\bar{3}01\}$, $z = \{11\bar{2}1\}$.

The crystals most frequently met with are, as already mentioned, small in size and of acute rhombohedral habit. The predominant form is α, which, together with the base, is in most cases alone present, fig. 2, Plate II. Besides these forms the crystals often show the more acute negative rhombohedron γ, forming with the former parallel combination-edges (fig. 3, Plate II). The more obtuse negative rhombohedron y is less common on these crystals; it occurs in combinations represented by fig. 4, Plate II. This form, as well as the other more obtuse rhomboheda is present chiefly on the larger crystals.

These larger crystals present, with regard to their development, a highly prominent peculiarity. While on most crystals the more obtuse forms (those with the c-axis shorter) are found at the ends and the more acute forms at the middle edges, the reverse is the case with the larger crystals. They are terminated at the upper and lower ends by the acute forms (those with a long c-axis), and the more obtuse forms present a larger or smaller protuberance at the middle, fig. 5, Plate II. These balllike central parts of the crystals often differ as to their character or condition from the rest of the mineral. While the mineral in general is quite fresh, there portions seem to have undergone some sort of alteration. The faces that occur have only a waxy shimmer or are quite dull, so that perceptible reflexions are seldom obtained from them. The determination of the forms in these portions has, therefore, presented great difficulties. The forms i, t, u and s have been determined

with full certainty. Besides them there, however, occur several others which it has not been possible to identify. Thus, both positive and negative rhombohedrons, hexagonal bipyramids, and perhaps also scalenohedral forms occur that are undetermined. Owing to the strong horizontal striation or step-like structure of the crystals the zonal relation between the different forms also remains uncertain. The hexagonal prism of the second order, n, whose faces likewise always are dull, could, however, be determined by its zonal position (Fig. 5, Pl. II).

As has already been mentioned, also the small unaltered crystals and the unaltered end-portions of the larger crystals are not well adapted for accurate angular measurements. Sometimes the faces certainly are tolerably brilliant, but owing to the striation the reflections are in most cases multiplied and consequently uncertain. Of the great number of angular values obtained by numerous measurements on about twenty crystals the majority had to be rejected as not leading to simple symbols for the various forms. Only such forms as have been more regularly met with on several crystals have been regarded as certain and put down in the above list.

The crystals generally present a very distinct rhombohedral development; this is especially true of the small individuals. On the larger individuals the positive and negative forms are not infrequently of nearly equal development. It is then doubtful which are of one and which of the other kind. In most cases, however, the form a predominates and can serve to decide the question. No other means of distinguishing between positive and negative forms can be given.

With regard to the different forms the following remarks may be added. The base occurs constantly on every crystal, not infrequently with both faces, especially on the small crystals, on which it forms small triangular planes. It is the only form whose faces are always brilliant; they are also mostly quite even. On the larger crystals, which are often thickly

tabular parallel to the base, the faces of this form are not infrequently somewhat uneven so as to give multiple and indistinct reflections. The prism of the second order, n, occurs only on the protuberant middle part of the larger crystals. On the smaller crystals this form has not been observed. Its faces are always dull. The hexagonal bipyramid is present under the same circumstances as the preceding form. Its faces are likewise dull.

The rhombohedral forms may be grouped into positive and negative forms as follows.

Positive	Negative
. . . . .	$i = \{1\bar{1}05\}$
$t = \{20\bar{2}9\}$	$u = \{\bar{2}209\}$
. . . . .	$q = \{1\bar{1}02\}$
. . . . .	$r = \{2\bar{2}03\}$
$v = \{30\bar{3}4\}$	$y = \{\bar{3}304\}$
$p = \{10\bar{1}1\}$	. . . . .
$z = \{40\bar{4}3\}$	. . . . .
$a = \{30\bar{3}2\}$	$\beta = \{\bar{3}302\}$
. . . . .	$\gamma = \{\bar{3}301\}$

To the positive forms t, v and a correspond, as will be observed, respectively the negative forms u, y and β. The negative forms i, q, r and γ have no corresponding positive, and the positive forms p and z no corresponding negative forms.

Common to the South American parisite and the Greenland mineral are only the forms c, m, r, p and s. Consequently the other forms observed by me would be new for parisite. Most of the other forms occurring on the parisite of Muso are hexagonal bipyramids (of the second order). Such forms are also present on the Narsarsuk mineral, though it was not, from reasons stated above, possible to determine them. It is, therefore, probable that several more forms are common to the minerals from the two localities.

As G. Nordenskiöld has shown, twin formation is very

common with the Narsarsuk mineral. The twins have the base as composition-face, and one of the individuals is revolved 60° about the vertical axis with reference to the other individual. A twinning of this kind would not, of course, be possible, if the mineral were holohedral hexagonal. The twins are easily recognizable by alternating re-entrant and salient angles at the line of twinning. Sometimes the twinning is repeated, several lamellæ in twin position having grown together, which gives the crystals a step-like or strongly striated appearance. If both negative and positive rhombohedrons occur, the twins will resemble hexagonal bipyramids. It might be supposed that the South American parisite were formed in such a manner and that, consequently, it is only seemingly holohedral.

In the table on the following page I have brought together the results of measurements from which the different forms have been determined, and also the corresponding calculated values.

The specific gravity of the mineral from Narsarsuk I found by weighing in benzole, to be = 3,902. The specific gravity of the parisite from Muso is according to Damour = 4,358, according to Vrba = 4,364. By way of control I have also determined the sp. gr. of a crystal of the Muso mineral by the same method as I used for the mineral from Narsarsuk; I found it to be = 4,3915. The material used for both determinations was pure and homogeneous. The hardness of the Greenland mineral is the same as that of the Muso parisite, viz. 4,5. The mineral is brittle and easily pulverized. The fracture is subconchoidal to splintery. In quite fresh material i. e. in the small crystals and in the end portions of the larger ones no cleavage is observable. The middle portions of the larger crystals, on the other hand, may often be divided parallel to the base. Cut parallel to the c-axis they also show in their middle part interrupted partings parallel to the base. These partings, however, are probably not to be regarded as true cleavages, but as partings of secondary origin,

Table of angles.

	1	2	3	4	5	6	7	8	9	Calculated
(0001) : (11$\bar{2}$05)	. . . . .	. . . . .	37° 51′	. . . . .	37° 55′	. . . . .	. . . . .	. . . . .	. . . . .	37° 51′
: (20$\bar{2}$9)	40° 39′	40° 40′	40° 45′	. . . . .	41° 1′	. . . . .	. . . . .	40° 47′	. . . . .	40° 48′
: (22$\bar{4}$09)	. . . . .	40° —	. . . . .	40° 23′	40° 17′	. . . . .	. . . . .	. . . . .	40° 30′	"
: (11$\bar{2}$02)	. . . . .	63° 3′	. . . . .	. . . . .	. . . . .	. . . . .	. . . . .	. . . . .	62° 59′	62° 46′
: (22$\bar{4}$03)	. . . . .	. . . . .	. . . . .	. . . . .	. . . . .	68° 42′	. . . . .	. . . . .	. . . . .	68° 53′
: (30$\bar{3}$4)	70° 48′	70° 55′	70° 36′	70° 26′	70° 54′	. . . . .	. . . . .	70° 49′	70° 27′	71° 4′
: (33$\bar{6}$4)	70° 51′	. . . . .	71° 59′	. . . . .	. . . . .	. . . . .	. . . . .	. . . . .	. . . . .	"
: (10$\bar{1}$1)	75° 36′	. . . . .	74° 11′	. . . . .	. . . . .	75° 22′	. . . . .	. . . . .	. . . . .	75° 34′
: (40$\bar{4}$3)	78° 16′	. . . . .	. . . . .	. . . . .	. . . . .	. . . . .	. . . . .	. . . . .	. . . . .	79° 5′
: (30$\bar{3}$2)	80° 36′	. . . . .	80° 8′	. . . . .	80° 52′	. . . . .	80° 15′	80° 10′	. . . . .	80° 13′
: (33$\bar{6}$2)	80° 47′	. . . . .	. . . . .	. . . . .	80° 23′	. . . . .	. . . . .	. . . . .	. . . . .	"
: (33$\bar{6}$1)	. . . . .	. . . . .	. . . . .	85° 41′	84° 57′	85° 27′	. . . . .	85° 57′	. . . . .	85° 6′
: (11$\bar{2}$1)	. . . . .	. . . . .	. . . . .	. . . . .	. . . . .	. . . . .	. . . . .	81° 18′	. . . . .	81° 33′
: (10$\bar{1}$0)	. . . . .	. . . . .	. . . . .	. . . . .	. . . . .	89° 45′	. . . . .	. . . . .	. . . . .	90° —
(03$\bar{3}$2) : (30$\bar{3}$2)	. . . . .	. . . .	. . . . .	. . . . .	. . . . .	. . . . .	117° 8′	. . . . .	. . . . .	117° 4′
(03$\bar{3}$1) : (33$\bar{6}$1)	. . . . .	. . . . .	. . . . .	119° 30′	. . . . .	. . . . .	. . . . .	. . . . .	. . . . .	119° 16′

since they do not occur in such portions of the crystals as are undoubtedly fresh.

The colour of the mineral is wax-yellow passing into light greyish yellow or hair-brown. The projecting central portion of the larger crystals is almost always of a light ash-grey colour with a faint tinge of yellow or brown. Only in thin plates is the mineral translucent, otherwise only subtranslucent. The crystal planes that are not dull have a vitreous or, owing to the striation, almost a silky lustre, approaching on the base to adamantine. The fracture shows a greasy lustre, or sometimes only a waxy glimmer.

A section of a small homogeneous crystal, oriented parallel to the *c*-axis, shows under the microscope a straw-yellow colour without any perceptible pleochroism. Even if the section is very thin, the interference colours are vivid, indicating strong double refraction. In sections from a crystal with the central portion projecting, oriented as before, the end portions perfectly agree with sections of the small crystals. The middle part is also straw-yellow faintly inclining to green. Weak pleochroism is observable here; the ray vibrating parallel to the *c*-axis is most strongly absorbed. A reddish brown pigment is arranged in zones parallel to the base and to the traces of the rhombohedral faces. These zones alternate with nearly colourless ones. Sections parallel to the base through the end portions of the crystal are straw-yellow and homogeneous, showing a regular positive axial image with the coloured rings close to one another. A similarly oriented section through the central portion of the crystal, on the other hand, shows the reddish brown pigment in hexagonal zones. The axial image is less distinct, and the coloured rings lie less closely, though the plate has the same thickness as the preceding one.

For the determination of the indices of refraction of the mineral a prism was ground with the refracting edge parallel

to the *c*-axis of the crystal [1]). Though the mineral transmits but little light, the indices of refraction could be determined with great accuracy. From the values of angles that were obtained the following figures are calculated

	Green	Yellow	Red
ω	1,6767	1,6742	1,6718
ε	1,7729	1,7701	1,7664
$\varepsilon - \omega$	0,0962	0,0959	0,0946.

For the parisite from Muso the indices of refraction have been determined by Senarmont, whose values are quoted by Des Cloizeaux. These values are as follows

ω	ε	$\varepsilon - \omega$
1,569	1,670	0,101.

The Greenland mineral consequently has a considerably stronger refraction than the American mineral. The strength of the double refraction, on the other hand, is about the same in the two minerals.

Before the blowpipe in the forceps the mineral is infusible and emits an intense white light. Splinters that have been ignited are of a light liver-brown colour and traversed by cracks. The mineral is fairly easily soluble in acids, with the evolution of carbon dioxide.

Of the analysis made by me the following account may be given. Pure material for analysis has by no means been wanting, and the values obtained could therefore be verified by duplicate determinations. Both the carbon dioxide and the fluorine were determined directly. The carbon dioxide was

[1]) All prisms and plates cut for the axial angle determinations, and microscopical preparations used in this investigation have been made by Mr. A. R. Andersson, »Preparator» at the Geological Institution of the University of Upsala, with his well-known skill and care. They are deposited, together with the rest of the material of investigation, in the Mineralogical Museum of Copenhagen.

driven off by boiling with dilute hydrochloric acid and collected in a potash apparatus. The fluorine was expelled as silico-fluoride, was collected in a soda solution and then precipitated as fluoride of calcium. The precipitate obtained by ammonia from the mineral solution was dissolved in hydrochloric acid, and the solution was saturated with potassium sulphate, by which the cerium earths were thrown down. The slight amount of precipitate obtained by ammonia from the filtrate was attributed to yttria. The cerium oxide was separated from the lanthanum and didymium oxides by leading chlorine for some time into potash solution in which the oxides were suspended. The undissolved residue was taken to be oxide of cerium. The values thus found are given below under I. Those obtained by Damour and Deville from the mineral from Muso are given under II.

	I.	Molecular ratios.	II.	Molecular ratios.
CO_2	26,54	0,6032—2	23,48	0,5337—3
Ce_2O_3	28,14		44,17	
La_2O_3	22,88	0,3221—1	8,05	0,3702—2
Di_2O_3			9,98	
Y_2O_3	1,23		....	
CaO	17,13		10,11	0,1808—1
Na_2O	0,19	0,3103—1	....	
K_2O	0,12		....	
F	5,82	0,3063—1	5,55	0,2921—2
	102,05		101,34	
$-O$	2,45		2,34	
	99,60		99,00.	

For the mineral from Narsarsuk the chemical formula thus becomes

$$Ce\,F\,Ca\,C_2O_6,$$

in which *Ce* indicates all metals of the rare earths contained in the mineral, and *Ca* stands for calcium together with the small

quantities of alkali metals. This composition may be denoted by the following structural formula:

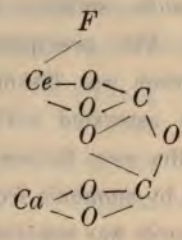

For the mineral from Muso the formula would be somewhat more complicated, viz.

$$Ce_2F_2CaC_3O_9,$$

the structural formula being as follows:

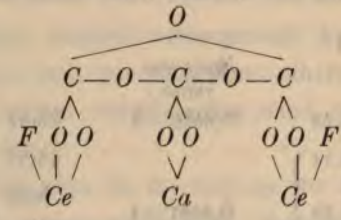

The values found by Damour and Deville do not, however, quite correspond to the latter formula. The quantity of fluorine indicated is too small. Further, the analysis shows a loss of 1 per cent. If this loss is assumed to be fluorine (or hydroxyl), the agreement with the proposed formula is somewhat better. The difference in composition between the two minerals would then lie in the fact that the Narsarsuk mineral consists of equivalent quantities of fluorcarbonate of earths and of calcium carbonate, while in the mineral from Muso these substances are presumed to enter in the proportion of 2 to 1.

In the foregoing it has been stated that the two minerals differ from each other with regard to several of their most important characters. To facilitate the comparison these characters are collected together in the following table.

Parisite from Muso.	Mineral from Narsarsuk.
Composition: $Ce_2F_2CaC_3O_9$	$CeFCaC_2O_6$
Cleavage: Distinct basal	No distinct true cleavage
Sp. Gr.: 4,364	3,902
Refractive indices: ω = 1,569	1,6742
ε = 1,670	1,7701
Crystallization: Hexagonal	Trigonal

These differences are so important that, if all the statements could be accepted as correct, the mineral from Narsarsuk which I have here described, and the parisite from Muso should be regarded as two distinct mineral species. The correctness of the statements as to the Muso mineral is, however, in my opinion not quite beyond all doubt. The chemical formula of the mineral cannot be definitely established, as long as the analyses shows a considerable loss. If this loss represents fluorine, the formula of Damour and Deville will hold good. If, on the other hand, the loss consists, for instance, of lime, the composition approaches somewhat more to that of the mineral from Narsarsuk. But in this case no simple relation between the amounts of calcium carbonate and fluorcarbonate of the rare earths is obtained; that these substances should replace each other isomorphously, can hardly be assumed[1]). The discrepancy as to specific gravity may to some extent be explained as due to the fact of the Muso mineral containing a considerably larger amount of the heavy earths than does the other mineral.

[1]) After the above was written, an article on parisite from Ravalli Co., Montana, has been published by S. L. Penfield and C. H. Warren (Amer. Journ. of Science, 1899, 4 Ser., Vol. 8, p. 21). In this article an analysis made by Warren on parisite from Muso is also given. This analysis agrees very closely with the formula $Ce_2F_2CaC_2O_9$ given above. This composition also belongs to the recently discovered parisite from Ravalli Co., which has, likewise, been found to be holohedral hexagonal. These facts are of the greatest importance with regard to the position of the mineral from Narsarsuk I hope soon to come back to the question.

It ought, therefore, to be heavier, though one might not have expected to find the discrepancy so great as it really is.

As for the hexagonal crystallization of the original parisite I have already pointed out that it may possibly be only apparent and due to constant twinning parallel to the base.

In other respects there is great agreement between the two minerals, and judging only from the outward appearance one could not consider the Narsarsuk mineral to be distinct from parisite. As, moreover, experience proves the necessity of great caution in announcing a substance as a new mineral species, I desist for the present from claiming for the one here described the position of a new mineral. It may be united to the parisite, and the true explanation of the discrepancies stated may depend on future investigation.

The parisite is of fairly common occurrence on Narsarsuk. At the locality No. 2 it has been found in the greatest quantity. Small crystals are most common here, but also larger individuals have been found in this place. The accompanying minerals here are neptunite, epididymite, ægirine, microcline etc., all of which are older than the parisite. Of more recent or of contemporaneous origin are albite, elpidite, fluorite, cordylite and polylithionite. Also at the localities No. 12 and 13 parisite has been met with tolerably abundantly. At the former locality the largest of the known crystals (see page 31) was found. The best developed, medium-sized crystals were found at the locality No. 17 associated with the same minerals as at the locality No. 2 and, besides, with arfvedsonite, rhodochrosite, and spodiophyllite.

10. Cordylite (Barium-parisite).

The name of this new mineral is derived from the Greek word *κορδύλη*, a club; the reason is that its crystals often have a club-like form.

Cordylite has as yet only been found in the crystallized state; the crystals are always of minute size. The largest individuals met with reach only 3^{mm} in length by 1^{mm} in diameter. Most of the crystals, however, do not even reach 1^{mm} in the greatest dimension.

The crystals belong, as far as can be yet ascertained, to the bipyramidal class of the hexagonal system. They are bounded by a hexagonal prism, three pyramidal forms, and the base. Their habit is partly prismatic (figs. 7 and 8, Pl. II) partly pyramidal (fig. 1, Pl. III). In most cases the faces are dull or show only a waxy glimmer, so that sharp reflections can seldom be obtained. A few selected crystals, however, have admitted of angular measurements that have given most accurate and agreeing results. Thus, five independent measurements of the angle between the base and the faces of the uppermost pyramid gave the same result, viz. 46° 12′; other values obtained deviate by only a few minutes.

In order that the crystallographical relation between cordylite and parisite may be made clear, the aforesaid pyramid (p in the figure) must be given the somewhat complicated symbol

$$p = \{4.0.\bar{4}.15\}.$$

From the angular value given above, viz.

$$(4.0.\bar{4}.15) : (0001) = 46° 12'$$

the following axial ratio for the cordylite is calculated:

$$a : c = 1 : 3{,}3865,$$

which comes very near to the axial ratio of the parisite, viz.

$$a : c = 1 : 3{,}3645.$$

The forms observed on cordylite will, according to the above axial ratio, obtain the following symbols:

$$c = \{0001\},\ p = \{4.0.\bar{4}.15\},\ q = \{10\bar{1}3\},$$
$$r = \{20\bar{2}3\},\ m = \{10\bar{1}0\}.$$

The most common combination of faces is shown by fig. 7, Pl. II. The forms are here the hexagonal prism and the lowest pyramid, p. The prismatic faces are almost always dull or feebly glimmering. The faces of the pyramid p, on the other hand, are in most cases brilliant. On crystals of this development they, however, regularly show a distinct horizontal striation, due to the alternation of the forms m and p.

The base is comparatively seldom present on the cordylite crystals. It forms a small, hexagonal plane, which is always smooth and very brilliant. On such crystals on which the base is developed, the pyramidal faces generally are less striated than on those where the base is absent. It may be stated, as a rule, that among the faces of these crystals, the base is the most brilliant, while the prismatic faces have the least lustre. Among the pyramidal forms, p has the most, and r the least brilliant faces. Thus, the lustre gradually diminishes from the base to the hexagonal prism.

In the face-combination of the cordylite crystals the forms q and r play a subordinate part. They mostly occur on the comparatively rare crystals of pyramidal habit (figs. 1, 2, Pl. III). These faces are in general very narrow, and on account of their feeble lustre they can only in exceptional cases be determined. Often they (apparently) form a continuous rounding of the edge between p and m.

The following table contains the measurements from which the different forms have been determined.

$(4.0.\bar{4}.15) : (0001)$	$= 46° 12'$	$(4.0.\bar{4}.15) : (\bar{4}.0.4.15)$	$= 92°44'$
	$46° 9'$	calculated	$92°24'$
	$46° 12'$	$(10\bar{1}3) : (0001)$	$= 52°51'$
	$46° 12'$		$52°29'$
	$46° 15'$		$52°25'$
	$46° 12'$		$52°51'$
	$46° 12'$	Calculated	$52°30'$
Mean	**46° 12'**		

$(4.0.\bar{4}.15) : (4.0.4.\bar{1}5)$	=	87° 9′
calculated		87° 36′
$(20\bar{2}3) : (0001)$	=	69° 47′
calculated		69° 1′
$(10\bar{1}3) : (10\bar{1}0)$	=	37° 4′
calculated		37° 30′
$(10\bar{1}0) : (01\bar{1}0)$	=	59° 55′
		60° 4′
Calculated		60° —

The cordylite crystals are mostly attached by one end to the surface on which they rest; hence, of course only the free end has been capable of crystalline development. Sometimes, however, they are attached by one side (longitudinally); sometimes also two individuals have grown together so as to form a cross. In the latter cases both ends are developed.

The development of these crystals presents a peculiarity of form: they often have a sceptre- or club-like appearance (hence the name of the mineral). This shape is due to the circumstance that the common pyramidal crystal, instead of being, as usual, terminated at both ends by the fundamental pyramid or the base, has got a thinner prismatic prolongation by which the crystal is attached to the surface on which it rests (fig. 9, Pl. II). Sometimes there are two such pyramidal crystals grown together by the base (fig. 2, Pl. III). The reentrant angle thus formed round the middle of the crystal might be regarded as a mark of twinning. Such a formation is not, however, possible here, if the base, which would be the composition-face, is a plane of symmetry. Should there be a real twin formation, then the mineral must belong to one of the classes of the hexagonal system in which the base is not a plane of symmetry. There are, however, no other signs indicating that this should be the case. The crystals are too small

to be subjected to the Kundt test for pyroelectricity; nor have I been able to produce any distinct and decisive etching figures on them. It must therefore be presumed that the cordylite crystals belong to the bipyramidal (holohedral) class of the hexagonal system and that in this case there is nothing but a parallel growth.

The colour of the mineral is pale wax-yellow; sometimes it is nearly colourless, sometimes inclining to brownish yellow. In the fresh condition it is nearly clear and transparent, but by a superficial alteration the crystals usually become ochre-yellow and dull. This is generally the case with the prismatic faces and with the pyramidal faces that lie nearest to them. The faces of the base and the fundamental pyramid, on the other hand, generally are, as has already been stated, free from this alteration. On the fresh fracture the mineral has a vitreous to adamantine, on the base generally a pearly, lustre.

In microscopical sections the mineral is colourless or shows a hardly perceptible tinge of yellow. Sections oriented parallel to the vertical axis show extinction parallel to this axis without perceptible pleochroism. Sections oriented parallel to the base are optically perfectly isotropic. In converging polarized light a normal uniaxial interference figure with negative character is exhibited. The rings are rare, which indicates that the mineral has weak double refraction. No attempts have been made to determine the indices of refraction, because the crystals are so small that a prism cannot be made.

A section parallel to the base shows a zonal structure. The zones run parallel to the hexagonal outline of the section and seem to depend upon submicroscopic inclusions (fig. 10, Pl. II). In the middle of the section there is a minute hexagonal area that is clear and without inclusions. This area is surrounded by a hexagon of some opaque yellowish matter. Under high magnifying powers it separates into concentric zones

of alternately clear and opaque substance. From its sides (not from the corners) radiate brush-like opaque lines forming a star of six rays. Outside of this hexagon the section is clear and free from inclusions nearly as far as the outer edge, where there is again an opaque zone of the same character as the foregoing. From its sides rays shoot inwards meeting the rays of the central star. These phenomena probably are of a secondary nature and due to alteration of the mineral.

The hardness of cordylite is = 4,5 (the mineral easily scratches fluorite, but not apatite). It is rather brittle; fracture conchoidal. Parallel to the base there is a very distinct cleavage. In this direction the crystals easily break, and the above described structure is often microscopically observable on the cleavage plane.

By weighing in benzole the specific gravity of the mineral was found to be = 4,31 (Mauzelius).

Before the blowpipe, cordylite behaves as follows. When heated alone it decrepitates violently cleaving into thin plates along the basal cleavage. In the most intense heat the splinters become brownish in colour, but do not melt. Moistened with hydrochloric acid they colour the flame green.

The mineral is easily soluble in hydrochloric acid with the evolution of carbon dioxide.

As only a very small quantity of cordylite has been found, the amount that could be procured for the analysis was rather scanty. Nearly all the specimens at hand were scraped, and the impure material thus obtained was subjected to a tedious process of collecting under the magnifying glass. In this way 0,6489 gr. of almost pure material was obtained. This material was divided into two portions, the carbon dioxide being determined on 0,2501 gr. and the other constituents on the remainder. The analysis has been performed by R. Mauzelius, and the result is as follows.

		Molecular ratios.		
CO_2	23,47	0,533	0,534	3
ThO_2	0,30	0,001		
Ce_2O_3	23,72	0,072	0,150	0,84
$La_2O_3 Di_2O_3$ etc. .	25,67	0,078		
Y_2O_3	trace			
FeO	1,43	0,020	0,167	0,94
BaO	17,30	0,113		
CaO	1,91	0,034		
H_2O	0,80	0,044	0,172	0,97
F_2	(4,87)	0,128		
Insoluble	2,58			
	102,05			
O	2,05			
	100			

The molecular ratios of the carbon dioxide, the sesquioxides, the monoxides, and the fluorine are consequently approximately 3 : 1 : 1 : 1. This gives the following chemical formula for cordylite:

$$Ce_2F_2BaC_3O_9.$$

But the values found do not exactly correspond to this formula. The discrepancy might be explained by the material being perhaps in part not quite fresh. That the material for the analysis was not perfectly free from foreign admixtures, is shown by the insoluble residue. It is also to be regretted that the fluorine could not, for want of material, be determined directly.

However, it is evident that the mineral in question is nearly related to parisite, especially to the parisite from Muso. In chemical constitution the two minerals agree excepting that the amount of calcium entering into one is replaced by barium in the other. The specific gravity of cordylite, too, is the same as that of the parisite from Muso; basal cleavage is likewise common to the two minerals. On the other hand, ey differ distinctly from each other in cordylite being

optically negative with, as it seems, weak double refraction, while parisite has strong, positive double refraction.

If the parisite from Muso is in reality holohedral hexagonal, then cordylite agrees with it also in this respect in contradistinction to the parisite from Narsarsuk, which is decidedly trigonal. It is not, however, proved that the mineral from Muso and cordylite may not be trigonal, as what is regarded as hexagonal bipyramids of the first order might be such pyramids of the second order. Such is, for instance, the case with the mineral spangolite, the rhombohedral nature of which could be established only by etching[1]).

Cordylite has been found only at the locality No. 2 on Narsarsuk. The mineral occurred here very sparingly partly implanted on loose specimens and partly on the pegmatite in situ. On the specimens it is mostly associated with parisite and neptunite, and also with the ancylite described below. The cordylite crystals are often implanted on ægirine crystals, generally in small depressions on the latter. Sometimes the mineral is met with on neptunite crystals of type II and also on tabular crystals of lepidolite. The mode of occurrence shows that the mineral belongs to a comparatively late generation, as both the neptunite and the parisite, which are among the most recent formations, are nevertheless older than the cordylite.

11. Ancylite.

This name is derived from the Greek word ἀγκύλος, curved, and has been chosen in allusion to the fact that the crystals of the mineral always have their planes strongly curved.

This new mineral has only been met with in crystals, but these are small in size and not very distinctly developed. There are, strictly speaking, two different kinds of them, though a

[1]) Amer. Journ. of Science, 1890, Vol. 39, p. 370.

sharp line can hardly be drawn between them. The least distinctly developed crystals measure less than $^1/_2{}^{mm}$ in diameter and are nearly spherical in form. Single crystals of the other kind reach 1^{mm} across, and they are in general somewhat more distinctly developed. Though their faces are always strongly curved, it may however, easily be observed that the crystals have an octahedral development. It may also usually be seen without difficulty that they are not regular octahedra, being shorter between the opposite corners in one direction than in the two other directions. Another easily observable fact is that two pairs of faces, namely those meeting at two opposite middle edges, if the aforesaid shortest direction is given a perpendicular position, differ as to their physical character from the two other pairs. From all this it is evident that the mineral cannot belong either to the cubic or to the tetragonal system. The optical investigation also shows that we have here a rhombic mineral. As, however, the faces present are of two different kinds they cannot form a rhombic bipyramid. The crystal form of the ancylite must consequently be considered as a combinatian of the prism of the first and that of the second order, viz. (Fig. 3, Plate III)

$$d = \{101\} \text{ and } e = \{011\}.$$

It has not been possible to find a single crystal with faces plane enough for measuring the angles on the reflecting goniometer. That the middle edges of the prismatic faces make angles of very nearly 90° with each other may be perceived without measuring. This is, indeed, all that could be ascertained by the attempts made to measure the angles on the reflecting goniometer, for the values obtained for the same angle vary up to 20°. I was therefore obliged to use another method for measuring the angles, by which, however, only approximate results could be obtained. On microscopical sections orientated parallel to the first and the second pinacoids the angles of the outlines were measured under the microscope with the greatest possible accuracy. As, however, the faces are curved, the

outlines of course also become curved, so that they could only be approximately adjusted. A great number of adjustments and readings have been made, and of the values thus obtained the means have been taken. The measurements found in this way are

$$(101) : (10\bar{1}) = 90° 5' \text{ and } (011) : (01\bar{1}) = 85° 4'.$$

From them the following axial ratios for ancylite are calculated:

$$a : b : c = 0{,}916 : 1 : 0{,}9174.$$

The larger and better developed ancylite crystals generally occur isolated from one another on the substance to which they are attached. The occurrence of a number of individuals grown together into small groups or druses is rare. They are often developed almost on all sides, being attached in rows along thin needles of ægirine or imbedded in a loose felted mass of such needles. Owing to the curved form of the faces and the circumstance that the corners and edges are more or less rounded the crystals get a somewhat sphere-like habit.

The highest degree of curvature is exhibited by the faces belonging to the prism of the second order, e; further they are generally almost quite dull. With the aid of a magnifier one finds that this dullness is due to the fact that the faces are divided into a number of minute triangular elements orientated so that their outlines are parallel to the outline of the whole face. The faces belonging to the prism of the first order, d, are more even than the others. They are also often tolerably bright. However, a division into diminutive triangular faces is observable also on them; but this division is here far less distinct than on the other faces.

The smaller, less distinct crystals are generally more rounded than those now described; they are either nearly spherical or have the form of irregular grains. They usually form continuous crusts coating the surfaces of feldspar or ægirine individuals. Masses of small ancylite crystals grown together

in this manner sometimes fill up tolerably large spaces between crystals of other minerals. Such masses, several centimeters in thickness have been met with; they seldom inclose foreign minerals. The small crystals are generally grown together so as to form thin flat plates, which are aggregated in parallel position, so that the whole forms a porous, schistose structure. The consistency of the whole is so loose that it can easily be crushed between the fingers.

In colour ancylite varies somewhat. Its normal colour is light yellow inclining to orange. Often the crystals are brownish or greyish, sometimes quite resin-brown. The small crystals that form crusts are generally of a yellowish green or yellowish grey colour. The crystal faces, when they are not dull, show a vitreous lustre; the fracture has a greasy lustre. The mineral is only subtranslucent.

Microscopical sections are colourless, but somewhat opaque. With a high magnifying power this opacity is found to be chiefly due to numerous ægirine needles that are imbedded in the mineral mass. The section orientated parallel to the first pinacoid (*a*) is bounded by the traces of the faces that form the prism of the first order. It has, consequently, rhombic boundaries. The extinction is here diagonal, though not quite uniform, and is somewhat undulating, which probably depends on the spheroidal form of the crystals. In the conoscope this section presents an interference figure with large axial angle (the obtuse bisectrix). The section parallel to the second pinacoid (*b*) is bounded by the traces of the faces that form the prism of the second order and, consequently, also has rhombic boundaries. The extinction directions lie diagonally, and an undulation like that in the foregoing section is observable. The conoscope shows an interference figure with a smaller axial angle (the acute bisectrix); also here, however, the axes are not visible within the field of the microscope. The section parallel to the third pinacoid (*c*) is bounded by the middle edges of the

crystal, and its outline is, consequently, rectangular. The extinction is parallel to the sides of the section and still more undulating than in the foregoing sections. The direction of the greatest velocity of light coincides with the crystallographical *a*-axis.

From the foregoing it is clear that the plane of the optic axes of the ancylite is parallel to the third pinacoid {001}, and that the acute bisectrix coincides with the crystallographic *b*-axis. As the latter also is the direction of the smallest velocity of light, the ancylite is optically positive.

The sections show high interference colours, and even tolerably thin sections show white of a higher order. The mineral, consequently, is strongly doubly-refracting. Owing to the unfavourable condition of the material it has not, however, been possible to determine the indices of refraction.

The hardness of ancylite is = 4,5. The mineral is possessed of a certain degree of toughness, so that, when it is crushed, the splinters do not fly about. The fracture is splintery. Cleavage not observable.

By weighing in benzole the specific gravity of the mineral has been found to be = 3,95 (Mauzelius).

Before the blowpipe in the forceps ancylite is infusible, and, as the carbonic acid is expelled, it assumes a brown colour. Heated in the closed tube it gives off water abundantly. Moistened with hydrochloric acid it imparts an intense red colour to the flame. It is readily soluble in acids with evolution of carbon dioxide.

The material for the analysis was taken from the crusts of small yellowish green crystals above mentioned. The crusts were crushed and the minute crystal grains selected by hand-picking with the aid of a magnifying glass. The material used may be regarded as perfectly pure. For determining the carbon dioxide 0,5514 gr. was used, and for the determination of the

other constituents 0,2961 gr. The analysis, made by R. Mauzelius, gave the following result.

			Molecular ratios	
CO_2	23,28		0,529	7
ThO_2	0,20		0,001	
Ce_2O_3	22,22	0,068	0,141	1,9
La_2O_3, Di_2O_3 etc.	24,04	0,073		
Y_2O_3	trace			
FeO	0,35	0,005	0,234	3,1
MnO	trace			
SrO	21,03	0,202		
CaO	1,52	0,027		
H_2O	6,52		0,362	4,8
F	trace			
Insoluble	0,60			
	99,76			

As will be observed, the molecular ratios of the carbon dioxide, the sesquioxides, the monoxides, and the water approximate closely to 7 : 2 : 3 : 5 corresponding to the formula

$$4Ce(OH)CO_3 + 3SrCO_3 + 3H_2O.$$

Though this formula certainly is comparatively simple; yet the composition of the mineral must be considered rather remarkable. Besides the high percentage of strontium, which is noteworthy, it is particularly the amount of water that merits observation. The latter can by no means be secondary, because the mineral no doubt is absolutely fresh. According to the formula two molecules of water enter into the group $4Ce(HO)CO_3$. The part played by the remaining three molecules cannot for the present be determined. That they ought to be regarded as water of crystallization, is very improbable, as it has not been ascertained that any part of the water should be more loosely combined than the rest.

The only mineral, to which one might think of uniting ancylite is the weybyeite described by Brögger[1]). The crystals of both these minerals belong to the rhombic system, and both consist chiefly of carbonates of cerium metals. I also started a priori from the supposition that the new Greenland mineral could be identified with the weybyeite. This has, however, proved impossible. The weybyeite crystals resemble small crystals of zircon formed by the fundamental pyramid alone. This may also be said to be the case with the ancylite crystals, but basal sections of the crystals in this position differ from each other. With the weybyeite the extinction-directions are diagonal, with ancylite, on the other hand, parallel, to the borders of the section. The axial ratios calculated for the two minerals are:

for weybyeite $a : b : c = 0{,}9999 : 1 : 0{,}64$
- ancylite $a : b : c = 0{,}916 : 1 : 0{,}917.$

Giving the crystals this position, the optic axial plane of ancylite is parallel to the base, that of weybyeite parallel to one of the vertical pinacoids. If the ancylite crystals are given such a position that the plane of the optic axes coincides with one of the vertical pinacoids, *e. g.* the first, $\{100\}$, and the obtuse bisectrix with the vertical axis, the forms present become

$$e = \{110\} \text{ and } d = \{101\},$$

and we obtain the following axial ratios:

$$a : b : c = 0.917 : 1 : 0{,}916.$$

These axial ratios cannot, any more than the former, be brought into a rational relation to that of the weybyeite.

If, lastly, the crystal is revolved 90° about the a-axis, d becomes $= \{110\}$ and $e = \{011\}$. With the crystal in this position the optic axial plane is parallel to the second pinacoid,

[1]) Zeitschr. f. Krystallogr. Vol. 16, pag. 650.

and the acute bisectrix parallel to the c-axis. The axial ratios then become $a : b : c = 0{,}9985 : 1 : 1.09$ or, if the c-axis is shortened to $^2/_3$ of its length:

$$a : b : c = 0{,}9985 : 1 : 0.726.$$

This certainly approximates somewhat to the axial ratio found for weybyeite; yet the difference is considerable.

As to the chemical composition of the two minerals a certain agreement probably exists. However, the composition of the weybyeite is so imperfectly known, owing to the insufficient quantity of material for analysis, that a detailed comparison is impossible.

The larger and best developed ancylite crystals have been found only at the locality No. 5 on Narsarsuk. The mineral was met with here together with needle-shaped ægirine crystals or hair-like ægirine individuals forming felted masses, together with clear, prismatic albite crystals elongated in the direction of the c-axis, dark-brown zircon crystals of type II, etc. Of these minerals, the ancylite has been last formed. The minute ancylite crystals grown together into crusts were found at the locality No. 2. The crusts generally occur on strongly corroded feldspar individuals. Among the numerous secondary minerals occurring in the place cordylite is the only one that may be said to have been found as directly associated with ancylite. The latter seems to be the older of the two.

12. Eudidymite.

Eudidymite from Narsarsuk is of extreme rarity, as only three detached crystals of the mineral have been found. They were met with among the loose gravel at the locality No. 3. The largest one is 32^{mm} in length, 20^{mm} in breadth and 11^{mm} in thickness and consists of a large number of crystal tables grown together in such a manner that the b-axes of the different individuals are parallel to one another, while the respective a-

Table of forms of euddidymite.

	Övre Arö	Lille Arö [1]	Narsarsuk
$c = \{001\}$	x	x	x
$b = \{010\}$	x	x	x
$e = \{0.10.3\}$	x		x
$p = \{053\}$			x
$d = \{\bar{5}02\}$	x	x	
$x = \{10.0.2\}$	x		
$q = \{\bar{5}02\}$	x		x
$l = \{310\}$	x		x
$u = \{335\}$	x	x	x
$o = \{111\}$	x	x	
$s = \{\bar{5}52\}$	x	x	x
$r = \{221\}$		x	
$f = \{\bar{1}14\}$		x	
$g = \{\bar{3}38\}$		x	
$h = \{\bar{5}59\}$		x	
$v = \{\bar{3}34\}$	x	x	x
$t = \{\bar{5}51\}$	x	x	x
$z = \{15.5.3\}$			x
$k = \{\bar{1}5.5.3\}$			x
$i = \{\bar{6}25\}$			x
$y = \{45.5.18\}$		x	

The measurements from which the different forms of the euddidymite crystals from Narsarsuk have been calculated are given below.

	Measured	Calculated
$b : c = (010) : (001)$	$= 90°$	$90°$
$e : b = (0.10.3) : (010)$	$= 15° 11'$	$15° 12\frac{1}{2}'$
$g : b = (053) : (010)$	$= 28° 28'$	$28° 30'$
$q : c = (\bar{5}01) : (001)$	$= 76° 15'$	$76° 17'$
$u : c = (335) : (001)$	$= 37° 5'$	$36° 49'$

[1] Bull. of the Geol. Instit. of Upsala, 1898, Vol. 4, p. 16.

		Measured	Calculated
$s : c = (552) : (001)$	=	70° 55′	70° 55½′
$t : c = (\bar{5}51) : (001)$	=	83°	82° 59′
$v : c = (\bar{3}34) : (\upsilon 01)$	=	44° 37′	44° 45′
$h : c = (15.5.3) : (001)$	=	71° 51′	71° 57′
$l : c = (310) : (001)$	=	86° 50′	86° 42′
$k : c = (\bar{1}5.5.3) : (001)$	=	78° 2′	78° 2′
$i : c = (\bar{6}25) : (001)$	=	43° 13′	43° 20′
$t : b = (\bar{5}51) : (010)$	=	30° 58′	31° 2′
$t : t = (\bar{5}51) : (55\bar{1})$	=	62° 7′	62° 4′
$t : q = (\bar{5}51) : (\bar{5}01)$	=	58° 57′	58° 58′
$k : q = (\bar{1}5.5.3) : (50\bar{1})$	=	28° 58′	29°

Twinning occurs rather subordinately on the eudidymite from Narsarsuk. By far the greatest number of the crystals are single individuals; it is only exceptionally that one meets with some thin lamella grown into, or grown together with, the thicker principal individual in twinned position. These twins are formed according to the following rule: the twinning plane = the third pinacoid {001}; the twinning axis, about which one of the individuals is revolved 180°, is at right angles to the said plane. Twinning according to the second of the laws proposed by Brögger[1] for the Norwegian eudidymite does not, as far as hitherto known, occur in the Narsarsuk mineral.

As has been mentioned in the foregoing, there, however, occurs a remarkable intergrowth between individuals of eudidymite and epididymite in perfect accordance with the relation observed between the two minerals from Lille Arö [2]). This intergrowth consists in the fact that needles of epididymite are

---

[1]) Zeitschrift für Kryst. Vol. 16, p. 591.

[2]) Bull. of the Geol. Inst. of Upsala. Vol. IV, pag. 23

[3]) Loc. cit.

in regular orientation implanted on the faces of the third pinacoid of the eudidymite. The orientation is such that the longitudinal direction of the epididymite needles is parallel to the edge $(111:001)$ or $(1\bar{1}1:001)$ on the eudidymite, and the third pinacoids $\{001\}$ of the two minerals are parallel.

13. Epididymite.

Of this mineral only very little material has hitherto been known. In the Lütze collection a very small quantity of it was found, and the crystals on which accurate measurements could be made, were very diminutive in size. The scanty supply of suitable material was also the reason why the optical investigation of the mineral could not be performed with the desirable accuracy.

The find of epididymite made afterwards near Langesund in Norway was, it is true, richer in as much as a larger number of specimens were met with there. But the single crystals on these specimens were smaller still than those from Greenland. An accurate optical investigation according to usual methods could not, therefore, be made on them any more than on the first-mentioned material. There has, consequently, been a certain deficiency in our knowledge of this mineral.

The epididymite material which I have collected on Narsarsuk is very rich, various, and excellent in every respect. Epididymite is, indeed, one of the most common minerals of the place. It was found at different localities in the area and with very varying associations. It is always crystallized, and the crystals vary in size from such as can be seen only with the aid of a magnifying glass to individuals and groups of more than half a decimetre in extent. Also in form the crystals differ considerably from one another. Among the different shapes three crystal types can easily be distinguished, a description of which is given here.

Type I. (Needle-shaped crystals).

By far the greatest number of the epididymite crystals occurring on Narsarsuk have an elongated, needle-like shape. They are generally small, seldom attaining more than half a cm. in length and 1^{mm} or two in thickness. The faces in the zone of the longitudinal axis are in general strongly striated; owing to this the more subordinate among them are sometimes difficult to determine. The faces that bound the crystals at the ends, on the other hand, are in most cases very well developed.

All forms previously observed by me on epididymite from Narsarsuk were found on crystals belonging to Type I. The position originally given to the crystals was such that their longitudinal direction coincided with the crystallographical *b*-axis, the most distinct cleavage of the mineral with the third pinacoid $\{001\}$, and the somewhat less distinct cleavage with the first pinacoid $\{100\}$. With this position the axial ratios calculated from the angles

$$(310) : (100) = 30° 4' \text{ and } (201) : (001) = 46° 53'$$

are as follows:

$$a : b : c = 1{,}7367 : 1 : 0{,}9274.$$

The axial ratios established for the monoclinic eudidymite, which is identical in chemical composition with epididymite, are the following:

$$a : b : c = 1{,}71069 : 1 : 1{,}1070; \; \beta = 93° 45\tfrac{1}{2}'.$$

Now, a somewhat greater agreement between the axial ratios of the two minerals is obtained by interchanging the *a*- and *b*-axes of epididymite *i. e.* revolving the crystals 90° about the *c*-axis and makiug the dome $\{201\} = \{011\}$ and the prism $\{310\} = \{110\}$. The axial ratios thus obtained for epididymite are

$$a : b : c = 1{,}7274 : 1 : 1{,}0680.$$

The forms hitherto known for epididymite are collected together below under **a** according to the new position, which is now proposed, and under **b** according to the position previously suggested.

a	**b**
$a = \{100\}$	$b = \{010\}$
$b = \{010\}$	$a = \{100\}$
$c = \{001\}$	$c = \{001\}$
$m = \{110\}$	$n = \{310\}$
$n = \{310\}$	$m = \{110\}$
$l = \{210\}$	$l = \{210\}$
$d = \{011\}$	$d = \{201\}$
$e = \{023\}$	$e = \{403\}$
$f = \{021\}$	$f = \{401\}$
$g = \{012\}$	$g = \{101\}$
$h = \{038\}$	$h = \{304\}$
$i = \{013\}$	$i = \{203\}$
$p = \{313\}$	$p = \{221\}$

The most important of these forms are represented on Fig. 5, Plate III. Among the terminal faces the prism of the third order, n, is predominant; often it is present alone. The fundamental prism m, however, also frequently occurs, but its faces are subordinate in size, compared to those of the preceding form. The pyramid p is less common, which is also the case with the first pinacoid a, that, besides, always is very narrow. Of the rarest occurrence is the prism l (not represented in the figure), which cannot, like the other planes in this zone, be referred to the hexagonal system. The presence of this form is, however, fully ascertained both on the mineral in the Lützen collection and on the new material.

Among the forms in the zone of the a-axis the prism of the second order, d, is always predominant. The prisms h and f too, are generally tolerably well developed. The other forms, in

the zone of the a-axis are often less distinct or only indicated by striation. Also the faces of the second and third pinacoids, b and c, are generally very narrow on crystals of this type.

Besides the forms mentioned above I have found on the new material two new ones, viz.

$$k = \{301\} \text{ and } o = \{312\}.$$

The form k symmetrically truncates the combination-edge $(313) : (3\bar{1}3)$ (Fig. 6, Plate III), by which its symbol is fully determined. The form o is in the zone between p and e. Therefore, the ratio of the a- and b-axes is the same for it as for p, i. e. $a : 3b$. The following values of angles may also be given.

	Measured	Calculated
$o : c = (312) : (001)$	$= 46° 51'$	$46° 57'$
$k : c = (301) : (001)$	$= 61° 55'$	$61° 40'$

These two forms complete an important zone, whose symbol is $[13\bar{3}]$ and to which the following faces belong:

$$(011),\ (312),\ (301) \text{ and } (3\bar{1}0).$$

The epididymite crystals belonging here are generally attached by one end either singly or in irregular groups. Sometimes several individuals present a regular orientation, being grown together by the b-pinacoids and having their basal faces in a common plane, by which tolerably wide plates have been formed.

Twins are not uncommon, and are formed by two individuals with common c-axis crossing each other at an angle of 60°; when a third individual is present, a regular star of six rays is formed (a trilling). The plates mentioned above often consist of such twinformations, a system of parallel needles being traversed at an angle of 60° by another (often also by a third) such system. Only penetration twins have been observed.

As mentioned above, the epididymite of type I is of most common occurrence on Narsarsuk. It has been observed at the

following localities. At No. 3 it occurs in association with catapleiite, eudidymite, aegirine, etc.; at No. 4 it is found together with neptunite of type I, elpidite, quartz, etc.; at No. 9 it is associated with elpidite etc., at No. 13 with lorenzenite needles, and at No. 15 with rhodochrosite and elpidite.

Type II (Broad plates).

The epididymite crystals belonging to this type are characterized by being broadly tabular parallel to the base (Fig. 7, Plate III). They attain considerably larger dimensions than the crystals of the foregoing type. The largest individuals that have been met with are 3^{cm} in width and 1^{cm} in thickness; yet they are only fragments and must, therefore, have been still larger. The dominating forms are the third and the second pinacoid. The former (the base) is always strongly striated parallel to the a-axis. Deeper depressions often run in the same direction, indicating that the crystal plates are formed by a number of needles that have grown together, showing a transition from type I to type II. The second pinacoid is also in general striated longitudinally.

The combination-edges between the two dominating pinacoids are truncated by a number of planes. On the goniometer one obtains for them a large number of more or less distinct reflections. Several of them are here neglected, as not leading to simple symbols. The forms given below as quite certain have comparatively simple symbols; all of them have been observed more than once. They are:

$q = \{0.1.12\}$, $r = \{0.1.10\}$, $s = \{015\}$, $t = \{025\}$, $u = \{035\}$, $v = \{032\}$, $x = \{071\}$, $y = \{091\}$.

Besides these, all the forms of this series stated as belonging to the foregoing type have also been observed on type II. The new forms are determined from the following measurements.

the zone of the a-axis are often less distinct or only indicated by striation. Also the faces of the second and third pinacoids, b and c, are generally very narrow on crystals of this type.

Besides the forms mentioned above I have found on the new material two new ones, viz.

$$k = \{301\} \text{ and } o = \{312\}.$$

The form k symmetrically truncates the combination-edge (313) : ($3\bar{1}3$) (Fig. 6, Plate III), by which its symbol is fully determined. The form o is in the zone between p and e. Therefore, the ratio of the a- and b-axes is the same for it as for p, i. e. $a : 3b$. The following values of angles may also be given.

	Measured	Calculated
$o : c = (312) : (001)$	$= 46° 51'$	$46° 57'$
$k : c = (301) : (001)$	$= 61° 55'$	$61° 40'$

These two forms complete an important zone, whose symbol is $[13\bar{3}]$ and to which the following faces belong:

(011), (312), (301) and ($3\bar{1}0$).

The epididymite crystals belonging here are generally attached by one end either singly or in irregular groups. Sometimes several individuals present a regular orientation, being grown together by the b-pinacoids and having their basal faces in a common plane, by which tolerably wide plates have been formed.

Twins are not uncommon, and are formed by two individuals with common c-axis crossing each other at an angle of 60°; when a third individual is present, a regular star of six rays is formed (a trilling). The plates mentioned above often consist of such twinformations, a system of parallel needles being traversed at an angle of 60° by another (often also by a third) such system. Only penetration twins have been observed.

As mentioned above, the epididymite of type I is of most common occurrence on Narsarsuk. It has been observed at the

following localities. At No. 3 it occurs in association with catapleiite, eudidymite, aegirine, etc.; at No. 4 it is found together with neptunite of type I, elpidite, quartz, etc.; at No. 9 it is associated with elpidite etc., at No. 13 with lorenzenite needles, and at No. 15 with rhodochrosite and elpidite.

Type II (Broad plates).

The epididymite crystals belonging to this type are characterized by being broadly tabular parallel to the base (Fig. 7, Plate III). They attain considerably larger dimensions than the crystals of the foregoing type. The largest individuals that have been met with are 3^{cm} in width and 1^{cm} in thickness; yet they are only fragments and must, therefore, have been still larger. The dominating forms are the third and the second pinacoid. The former (the base) is always strongly striated parallel to the a-axis. Deeper depressions often run in the same direction, indicating that the crystal plates are formed by a number of needles that have grown together, showing a transition from type I to type II. The second pinacoid is also in general striated longitudinally.

The combination-edges between the two dominating pinacoids are truncated by a number of planes. On the goniometer one obtains for them a large number of more or less distinct reflections. Several of them are here neglected, as not leading to simple symbols. The forms given below as quite certain have comparatively simple symbols; all of them have been observed more than once. They are:

$q = \{0.1.12\}$, $r = \{0.1.10\}$, $s = \{015\}$, $t = \{025\}$, $u = \{035\}$, $v = \{032\}$, $x = \{071\}$, $y = \{091\}$.

Besides these, all the forms of this series stated as belonging to the foregoing type have also been observed on type II. The new forms are determined from the following measurements.

plane parallel to the third pinacoid, and one of the halves is revolved 60° about the vertical axis (Fig. 1, Plate IV). The two halves generally fit in perfectly with each other, the prism *n* and the second pinacoid *b* forming an almost regular hexagon, and the fundamental prism, *m*, coinciding with the first pinacoid *a*. The congruity is so perfect that, if the two halves are of equal size, the twinning line may easily escape notice. Often, however, the two halves project beyond each other, the wide composition faces become visible, and it looks as if the two sub-individuals lay loose on each other.

With regard to clearness and translucency the crystals of type III surpass those of the other two types. The latter are generally traversed by a number of cracks or present a somewhat opaque appearance, whereas those of the third type almost always are quite clear.

The mineral is, in the form now described, comparatively rare, as only a few specimens have been found. They were met with at the locality No. 2 lying loose on the ground, before any digging was undertaken. The crystals are not attached by one end like the needle-shaped individuals, but they are imbedded in a porous mass, which chiefly consists of very small calcite individuals and elpidite and a brown alteration product with earthy texture.

The optical investigation of epididymite presents no small difficulties, owing partly to the feeble double refraction of the mineral, partly to its cleavages, which render the preparation of crystal sections suitable for determining the optic axial angles impossible. The epididymite material found in the Lütz en collection was very scanty, and the optical data gained by examining it have now proved to be very unsatisfactory, which justifies the doubts previously[1]) suggested by me as to the accuracy of that examination. The renewed investigation

[1]) Zeitschr. f. Kryst. 1894, Vol. 23, p. 357.

that I have now undertaken has given such results as, with the exception of the calculated axial angles, may be regarded as fairly accurate.

In sections cut parallel to the three pinacoids the extinction is parallel to the crystallographical axes. A section parallel to the second pinacoid, $b = \{010\}$, shows, though only if it is very thick, in converging polarized light an axial image with a small angle between the optic axes. The orientation of the image shows that the axial plane is parallel to the third pinacoid. To prepare a continuous section parallel to the first pinacoid, $a = \{100\}$ proved impossible on account of the cleavages of the mineral being at right angles to this direction. However, in the fragments obtained in the attempts to grind, one can perceive that also here the extinction is parallel to the c- and a-axes. In a section parallel to the base it can be ascertained that the direction of the greatest velocity of light is parallel to the b-axis. Thus, epididymite is optically positive.

The indices of refraction were determined by means of two prisms. One of these is bounded by a basic cleavage plane and of a ground and polished plane in the zone $[010]$, forming an angle of $37° 55'$ with the third pinacoid. The refracting edge is, consequently, parallel to the b-axis. The indices α (the ray vibrating parallel to the a-axis) and γ (the ray vibrating parallel to the b-axis) were here determined by light falling perpendicular to the basal plane. The other prism has its refracting edge parallel to the c-axis and is bounded by the second pinacoid and a plane in the zone $[001]$, both were ground and polished and formed with each other an angle of $37° 22'$. The indices α and β were here determined by light falling perpendicular to the first-mentioned prism face. They, however, lie so near to each other, that it presents the greatest difficulty to separate and fix them. The divergence obtained with the nicol in different positions in the collimator tube is

so slight, that the errors of observation are probably no less. The values obtained are

	Red	Yellow	Green
α	1,5416	1,5440	1,5465
β	1,5417	1,5441	1,5466
γ	1,5438	1,5464	1,5491
$\gamma-\alpha$	0,0022	0,0024	0,0026

For an accurate calculation of the angles between the optic axes it is here necessary that the indices of refraction should be fully reliable also with regard to the last decimal place; for only a unit more or less in this place is of considerable influence on the size of the angle in question. Such accuracy seems not to be attainable here; and therefore an error of a degree or two in the calculated axial angles may exist. The values calculated are

	Red	Yellow	Green
2 V	23° 34′	22° 38′	21° 42′

14. Aegirine.

No other mineral occurs on Narsarsuk in such considerable quantities or in such large crystal individuals as aegirine. Together with feldspar this mineral is the chief constituent of the numerous pegmatite masses that are met with on the plateau; as such it is no doubt of primary origin. However, the mineral also occurs there as a secondary formation, and probably dating from different periods. None of the other minerals probably offers so great resistance to the weathering agents as aegirine. While the feldspar and most of the other minerals are gradually disintegrated through the influence of the atmospheric agents, and the gravel thus formed is carried away by water and winds, the aegirine individuals remain more or less intact. It is these aegirine individuals lying on the

surface that have called the attention of the Greenlanders to this mineral occurrence.

The Lütze n collection consisted mainly of such aegirine crystals that had been isolated through the weathering of the rock. The other minerals in the collection were either such as were implanted on the aegirine crystals or such as probably had only by chance been added to the collection. Thus, aegirine in particular was well represented in this collection. To the description of this mineral that I have previously given, I have, therefore, little to add in this place.

The aegirine crystals from Narsarsuk are always imperfect with regard to the character of their faces. The measurements that can be performed on them may at most serve for the determination of the different forms, but one cannot use them as a basis for an accurate calculation of the axial ratios of the mineral. There is, however, no reason whatever for supposing that the crystallographical constants of the mineral from this locality should essentially differ from those for aegirine from other localities. For the Norwegian aegirine Brögger has calculated the following axial ratios:

$$a : b : c = 1{,}09753 : 1 : 0{,}60092$$
$$\beta = 73^\circ\, 9'\,^{1})$$

If these axial ratios are retained, the forms observed on the aegirine from Narsarsuk are as follows

$$a = \{100\},\ b = \{010\},\ c\ \{001\},\ m = \{110\},\ f = \{310\},$$
$$\chi = \{510\},\ P = \{\bar{1}01\},\ s = \{\bar{1}11\},\ u = \{111\},\ x = \{461\},$$
$$V = \{571\}.$$

As to the combination of faces the crystals examined are very simple, and all of the enumerated forms are known before as occurring on the Norwegian mineral. The most common

[1]) Zeitschr. f. Krystallographie 1890, Vol. 16, p. 319.

the zone of the a-axis are often less distinct or only indicated by striation. Also the faces of the second and third pinacoids, b and c, are generally very narrow on crystals of this type.

Besides the forms mentioned above I have found on the new material two new ones, viz.

$$k = \{301\} \text{ and } o = \{312\}.$$

The form k symmetrically truncates the combination-edge $(313) : (3\bar{1}3)$ (Fig. 6, Plate III), by which its symbol is fully determined. The form o is in the zone between p and e. Therefore, the ratio of the a- and b-axes is the same for it as for p, i. e. $a : 3b$. The following values of angles may also be given.

	Measured	Calculated
$o : c = (312) : (001) =$	$46° 51'$	$46° 57'$
$k : c = (301) : (001) =$	$61° 55'$	$61° 40'$

These two forms complete an important zone, whose symbol is $[13\bar{3}]$ and to which the following faces belong:

$$(011),\ (312),\ (301) \text{ and } (3\bar{1}0).$$

The epididymite crystals belonging here are generally attached by one end either singly or in irregular groups. Sometimes several individuals present a regular orientation, being grown together by the b-pinacoids and having their basal faces in a common plane, by which tolerably wide plates have been formed.

Twins are not uncommon, and are formed by two individuals with common c-axis crossing each other at an angle of 60°; when a third individual is present, a regular star of six rays is formed (a trilling). The plates mentioned above often consist of such twinformations, a system of parallel needles being traversed at an angle of 60° by another (often also by a third) such system. Only penetration twins have been observed.

As mentioned above, the epididymite of type I is of most common occurrence on Narsarsuk. It has been observed at the

porous masses, which fill the spaces between the primary minerals. These aegirine crystals are only a few mm. in length. The terminal faces of these crystals are bright, but uneven and allow of no accurate measurements.

In the porous masses of elpidite from the locality No. 2, in which the leucosphenite was found, numerous aegirine crystals were imbedded. These crystals, which sometimes have the thickness of a finger, are evidently older than the minerals in which they occur imbedded. In the vertical zone occur the usual forms m, a, b with brilliant faces. Towards the ends the crystals present a quadrilateral tapering caused by the vicinal faces x etc. on one side and, possibly, $O = \{\bar{6}61\}$ on the other. These four planes do not, however, run out in a point, the crystals being, as it were, irregularly broken off at the ends and terminated by a number of splinters (Fig. 5, Plate IV).

It looks as if these aegirine crystals were not originally formed in situ, or at least not in the position in which they are now found. They are often developed at both ends and are never implanted on larger mineral individuals. Sometimes they are broken into pieces and the parts of the broken crystal are found near one another, but separated by elpidite needles that have intruded between them. That the formation of the porous mass has not taken place without disturbances, may be inferred from the fact that the elpidite needles themselves are broken, the relative position of the fragments exhibiting the greatest variety. The cement by which the present position of the fragments is tolerably well secured is calcite crystallized out, too sparingly, however, by far to fill up all the interspaces.

The locality No. 1 is characterized by the presence of quartz as crystals rather rich in faces and of narsarsukite and tainiolite. The aegirine occurring here is also of a peculiar character in certain respects. The crystals are rather small and often traversed by brownish yellow zones and spots. These

the zone of the a-axis are often less distinct or only indicated by striation. Also the faces of the second and third pinacoids, b and c, are generally very narrow on crystals of this type.

Besides the forms mentioned above I have found on the new material two new ones, viz.

$$k = \{301\} \text{ and } o = \{312\}.$$

The form k symmetrically truncates the combination-edge $(313) : (3\bar{1}3)$ (Fig. 6, Plate III), by which its symbol is fully determined. The form o is in the zone between p and e. Therefore, the ratio of the a- and b-axes is the same for it as for p, i. e. $a : 3b$. The following values of angles may also be given.

	Measured	Calculated
$o : c = (312) : (001)$	$= 46° 51'$	$46° 57'$
$k : c = (301) : (001)$	$= 61° 55'$	$61° 40'$

These two forms complete an important zone, whose symbol is $[13\bar{3}]$ and to which the following faces belong:

$$(011), (312), (301) \text{ and } (3\bar{1}0).$$

The epididymite crystals belonging here are generally attached by one end either singly or in irregular groups. Sometimes several individuals present a regular orientation, being grown together by the b-pinacoids and having their basal faces in a common plane, by which tolerably wide plates have been formed.

Twins are not uncommon, and are formed by two individuals with common c-axis crossing each other at an angle of 60°; when a third individual is present, a regular star of six rays is formed (a trilling). The plates mentioned above often consist of such twinformations, a system of parallel needles being traversed at an angle of 60° by another (often also by a third) such system. Only penetration twins have been observed.

As mentioned above, the epididymite of type I is of most common occurrence on Narsarsuk. It has been observed at the

following localities. At No. 3 it occurs in association with catapleiite, eudidymite, aegirine, etc.; at No. 4 it is found together with neptunite of type I, elpidite, quartz, etc.; at No. 9 it is associated with elpidite etc., at No. 13 with lorenzenite needles, and at No. 15 with rhodochrosite and elpidite.

Type II (Broad plates).

The epididymite crystals belonging to this type are characterized by being broadly tabular parallel to the base (Fig. 7, Plate III). They attain considerably larger dimensions than the crystals of the foregoing type. The largest individuals that have been met with are 3^{cm} in width and 1^{cm} in thickness; yet they are only fragments and must, therefore, have been still larger. The dominating forms are the third and the second pinacoid. The former (the base) is always strongly striated parallel to the a-axis. Deeper depressions often run in the same direction, indicating that the crystal plates are formed by a number of needles that have grown together, showing a transition from type I to type II. The second pinacoid is also in general striated longitudinally.

The combination-edges between the two dominating pinacoids are truncated by a number of planes. On the goniometer one obtains for them a large number of more or less distinct reflections. Several of them are here neglected, as not leading to simple symbols. The forms given below as quite certain have comparatively simple symbols; all of them have been observed more than once. They are:

$q = \{0.1.12\}$, $r = \{0.1.10\}$, $s = \{015\}$, $t = \{025\}$, $u = \{035\}$, $v = \{032\}$, $x = \{071\}$, $y = \{091\}$.

Besides these, all the forms of this series stated as belonging to the foregoing type have also been observed on type II. The new forms are determined from the following measurements.

can perceive that in these places the mineral is traversed by a number of cracks running in a vertical direction, and often that in these cracks a dark opaque substance has been deposited, which probably is iron in some state of oxidation. The alteration, therefore, probably consists, in part at least, in the separation of iron from the mineral substance. By this separation the mineral loses its dark colour, the pleochroism likewise decreases and vanishes, and light-coloured zones and spots, microscopically visible, arise on the faces of the crystals. The microscopical cracks gradually become wider and more numerous. At last the columns remaining between the cracks are resolved into an aggregate of extremely diminutive crystals, often developed on all sides. These adhere so loosely to one another that they can be separated for instance by the touch of a soft brush. In colour they are yellowish brown with a tinge of green. They are elongated, of monoclinic habit, tabular parallel to the second pinacoid, and terminated by an oblique face, which makes an angle of about 40° with the first pinacoid. They have very strong double refraction so that, in spite of their thinness, they show between crossed nicols a most vivid play of interference colours. Under the microscope they are wine-yellow in colour and without any perceptible pleochroism. One extinction-direction makes an angle of about 7° with the longitudinal direction and towards the same side on which the oblique terminal face is. This extinction-direction coincides with the direction of the greatest velocity of light. The characters now enumerated justify the opinion that the mineral described is a new variety of aegirine, poor in iron and being the result of an alteration of common aegirine. The characteristics of this variety would be its light colour and strong double refraction. The oblique termination corresponds to the pinacoid of the second order $\{101\}$.

At the locality No. 9 the aegirine has been subject to strongly acting decomposing processes. The decomposition has taken place both on the ends of the crystals and on their

vertical faces, where large depressions have been formed. As usually, it has proceeded from the first points of attack along the cleavages of the mineral; between the paths thus formed by the proceeding decomposition columns of undecomposed aegirine remain. Between them and parallel to the longitudinal direction of the aegirine individuals, crystals of the new mineral lorenzenite have formed. It cannot, indeed, be directly proved that these crystals have formed simultaneously with the decomposition of the aegirine; this is, however, very probably the case. A circumstance which particularly speaks in favour of this supposition is the fact that the new crystals are arranged in a position perfectly parallel to the remains of the original mineral. The new crystals, however, occupy only a small part of the space left by the decomposition of the aegirine. The greater part of the constituents of the aegirine has, consequently, been carried off. On the other hand, the new mineral contains titanic acid, a constituent which probably does not, to an amount worth mentioning, enter into the composition of aegirine.

15. Arfvedsonite.

Arfvedsonite was originally an exclusively Greenlandian mineral. Only recently has it also been met with near Langesund in Norway, though in extremely small quantity. The original Greenlandian locality was the sodalite-syenite area on the firth of Kangerdluarsuk, where the mineral occurs in abundance and sometimes as very large crystal individuals. On Narsarsuk, on the other hand, arfvedsonite is found rather sparingly, and the crystals are there in general very small. The arfvedsonite material collected by me on Narsarsuk consists of two sorts of crystals, viz. such as are found in the Lütken collection (Type I), and such as show a different character (Type II).

Type I.

The arfvedsonite crystals belonging here are generally only 1^{mm} or two in length and less than 1^{mm} in thickness. However, individuals of 1^{cm} in length and thickness have been observed. In habit they are generally short prismatic and often developed on all sides. In general the small crystals are fairly well developed and their faces very brilliant, so that it has been possible to make fairly accurate measurements. A result of these measurements is, that the axial ratios established by Brögger for the Norwegian arfvedsonite, which differ not a little from the axial ratios established for common amphibole, must be accurate enough and applicable also to the arfvedsonite from Narsarsuk. The arfvedsonite crystals from Kangerdluarsuk are in general measurable only by the contact-goniometer; therefore the axial ratios proposed for them by Lorenzen[1]) have no claim to particular accuracy. The axial ratios calculated by Brögger are as follows

$$a : b : c = 0{,}54957 : 1 : 0{,}29751.$$
$$\beta = 75^\circ\, 44^1/_2{}'.$$

The forms observed on the arfvedsonite from Narsarsuk are the following.

$a = \{100\}$, $b = \{010\}$, $c = \{001\}$, $m = \{110\}$, $e = \{130\}$, $z = \{021\}$ and $r = \{\bar{1}11\}$.

This combination, with the exception of a, is represented by Fig. 9, Plate IV.

As already mentioned, the crystals generally are short prismatic parallel to the vertical axis. The fundamental prism m and the second pinacoid b generally are equally developed, so that the crystals have an almost regular hexagonal contour. Sometimes, however, they are flattened and somewhat tabular parallel to the second pinacoid. The faces belonging to the first pinacoid a and the prism of the third order e are rarely

---

[1]) This Journal, Vol. 2, pag. 48.

present and always very narrow. In general the faces of the vertical zone are strongly striated longitudinally; on some individuals, however, they are even enough to allow of fairly accurate measurements. The termination of the crystals generally consists of the third pinacoid alone. The faces of this form are a little less brilliant than the vertical faces. With a high magnifying power one perceives on them very minute, papillary elevations close to one another. In most cases, however, the faces give well defined reflections. The faces of the prism of the first order z, and those of the prism of the third order r occur comparatively seldom; they are small and not very bright.

The values obtained by measurements made on six different crystals, compared with the values calculated according to Brögger's axial ratios, are given in the following

Table of angles.

	1	2	3	4	5	6	Calculated
(110) : ($1\bar{1}0$)	56° 3′	56° 5′	56° 7′	. . . . .	56° 1′	. . . . .	56° 5′
(110) : (010)	61° 59′	61° 40′	61° 52′	. . . . .	. . . . .	62°	61° 58′
(110) : (100)	. . . .	. . . .	. . . . .	. . . . .	. . . . .	28° 18′	28° 3′
(110) : (310)	. . . .	. . . .	29° 39′	. . . . .	. . . . .	. . . . .	29° 56′
(110) : (001)	. . . .	. . . .	77° 56′	. . . . .	77° 31′	. . . . .	77° 27′
($\bar{1}10$) : (001)	. . . .	. . . .	102° 19′	102° 29′	102° 51′	102° 45′	102° 33′
(021) : (001)	. . . .	. . . .	29° 45′	. . . . .	28° 56′	. . . . .	29° 28′
($\bar{1}11$) : (001)	. . . .	. . . .	. . . . .	34° 23′	35° 4′	. . . . .	34° 39′
($\bar{1}00$) : (001)	. . . .	. . . .	. . . . .	. . . . .	. . . . .	104° 13′	104° 15′

A twin crystal of arfvedsonite was found in the Lützen collection. It is twinned according to the common law: the twinning-plane = the first pinacoid, the twinning axis normal to this, the second individual revolved 180°. Among the material now examined I have not found any twins. They must, therefore, be of very rare occurrence.

The colour of the mineral is a pure black. Even the thinnest splinters can hardly be said to be translucent. The powder is bluish grey.

Thin sections orientated parallel to the second pinacoid are translucent with bluish green colour. One extinction-direction makes, in the obtuse β-angle, an angle of 10° with the c-axis. This angle of extinction is, consequently, a little less than with arfvedsonite from other localities. The pleochroism is very strong. The light is most strongly absorbed in the aforesaid direction, and the axial colour is a deep greenish blue. In the direction perpendicular to this the axial colour is pale greyish green.

Sp. gr. = 3,021.

Arfvedsonite of type I generally occurs on Narsarsuk together with needle-like aegirine crystals of secondary formation and is evidently of the same age as these. Sometimes the arfvedsonite crystals are implanted on feldspar individuals without being accompanied by aegirine needles. Also in this case the mineral is of secondary origin. Most of the specimens on which this kind of arfvedsonite occurs, have been collected at the locality No. 2, but the mineral has also been found at the localities Nos. 4 and 8.

Type II (Riebeckite?).

The majority of the arfvedsonite crystals of the second type are about 1^{cm} in length and the same in breadth. They exhibit a very simple combination of faces, the forms present being only the three following:

$$a = \{100\}, \; c = \{001\}, \; m = \{110\}.$$

The prism of the third order is always predominant and often occurs alone in the vertical zone (Fig. 10, Plate IV). Sometimes also the first pinacoid occurs, always, however, represented by very narrow faces. The second pinacoid, on the contrary, has not been observed; the prismatic faces meet at the sides at acute angles. At the ends the crystals are bounded by a single

strongly curved plane, which, as such, would hardly have been determinable. However, a few small crystals were terminated by a face that was quite plane and brilliant and could be accurately determined by measurement as the third pinacoid *c* (Fig. 1, Plate 5). Some of these small crystals show a slight rounding towards the edges, obviously indicating the transition to the common crystals with curved terminal faces. This curved termination is, consequently, to be regarded as the third pinacoid with a most imperfectly developed prism of the third order, *s*.

With regard to their interior structure these arfvedsonite crystals are remarkable for enclosing a kernel of aegirine. This seems to be the case with all of them. At least in the four sections I have had made such a kernel is observable. The minerals show parallel orientation with coinciding *b*- and *c*-axes. The aegirine kernel is sometimes small, sometimes so large that the arfvedsonite substance only forms a thin shell round it.

In a section orientated parallel to the first pinacoid the absorption of light is nearly complete parallel both to the *b*- and the *c*-axis. The section consequently remains dark and opaque on a revolution of 360°, although it is rather thin. The axial colour is, in both directions, deep blue to black. In a section cut parallel to the second pinacoid one extinction-direction makes in the obtuse β-angle an angle of about 5° with the vertical axis. In this direction the absorption of light is as complete as in the section first described, and the axial colour is a deep bluish black. At right angles to this direction the section is tolerably translucent, with greyish brown colour inclining to green.

In this variety of arfvedsonite, consequently, the light-absorption, as well as the pleochroism, is considerably more intense than in that of the first type; at the same time the angle of extinction is perceptibly smaller.

Arfvedsonite of type II has been chiefly found at the locality No. 17, where it occurred associated with crystals of feldspar,

aegirine, elpidite, epididymite, parisite, etc. Like all the arfvedsonite on Narsarsuk, it is evidently of secondary formation. In general the crystals occur implanted on or between feldspar crystals. The small aegerine individuals that form the kernels of the arfvedsonite crystals have probably been previously implanted on the feldspar and afterwards been coated with arfvedsonite substance. Small crystals of arfvedsonite also occur grown together with large aegirine individuals in parallel position.

16. Crocidolite.

This mineral, whose character as an independent species can as yet hardly be said to have been established beyond doubt, has nowhere been met with as idiomorphic crystals. Also on Narsarsuk, where it is by no means rare, it has been found only as detached pieces of irregular form lying among the gravel, or as secondary inclusions in other minerals. The detached pieces always have a fibrous structure, which, however, is often so fine as to give the mineral an almost compact or earthy appearance; in such cases it is only with the aid of the microscope that the fibrous texture can be perceived. In most cases, however, this texture is sufficiently distinct to be observable by the naked eye. But rarely, and then only in very small portions of the mineral, are the fibres in parallel position. In general they are matted together into perfectly felt-like masses. These masses are very tough and can hardly be smashed to pieces with a hammer. The fibres are soft and easily separated by the nail. In the apparently compact masses there are sometimes small cavities lined with an extremely fine felty mass of the thinnest fibres. Sometimes the pieces of crocidolite have an oolitic structure, consisting of concretions of the size of a hemp-seed. Externally these little balls are somewhat angular and not very regular in form. Internally they consist of fibres radiating from the centre to the sur-

face. In their centre there is often a microscopical inclusion of some foreign substance, *e. g.* a feldspar grain or the like.

The colour of the mineral is a light sky-blue or greyish blue. The streak is light, nearly ash-grey faintly inclining to blue. Translucency hardly observable even in thinnest splinters. Such small portions in which the fibres are arranged in parallel position, show a marked silky lustre, but in general the fracture is earthy.

In microscopical sections the mineral is translucent with dark Prussian-blue colour. The fibrous texture is of extreme fineness, so that the single fibres are hardly observable. What can be seen are bundles or sheaves of parallel fibres, bent and interlaced, forming felt-like aggregations. There is no possibility of ascertaining, by what crystallographic elements the single fibres are bounded. The double refraction is extremely weak, and hardly perceptible. They seem to extinguish nearly parallel to their longitudinal direction. The pleochroism, on the other hand, is fairly distinct, the light-absorption being considerably stronger along the fibres than at right angles to them. The axial colour in the former direction is dark sky-blue, in the latter bluish grey.

It has already been remarked that crocidolite occurs on Narsarsuk as secondary inclusions in, or alteration products of, other minerals. These other minerals are arfvedsonite and aegirine. In the collection of minerals of the Stockholm University there is a large crystal having the form of aegirine, but its substance is wholly altered into compact and hard crocidolite. This specimen formerly belonged to the Lützen collection. In the former collection there are also some cleavage fragments, the chief cleavages of which are those of arfvedsonite, and one end of which consists of crocidolite. The unaltered part of such a cleavage fragment does not, however, consist exclusively of arfvedsonite. Certain enclosed portions of it show cleavage in other directions than those of arfvedsonite.

The angle which the two different cleavages make with each other could be measured with great accuracy on the reflecting goniometer. It was found to be 18° 26′. This agrees very well with the angle (18° 25½′), which the cleavages of aegirine make whith those of arfvedsonite, when the two minerals are in parallel position. Consequently, we have here an arfvedsonite with aegirine inclusions. A microscopical section, orientated parallel to the common plane of symmetry of the two minerals, shows this very distinctly. The arfvedsonite is easily recognized by its strong pleochroism and its angle of extinction of about 15°. The aegirine, on the other hand, is recognizable by its weak pleochroism and an extinction angle of only a few degrees in the direction opposite to that of arfvedsonite. The two minerals are, consequently, orientated with a common vertical axis and a common plane of symmetry and the respective a-axes inclined in the same direction. Thus they are not in twin position with reference to each other. It is very probable that the aegirine portions are the result of changes in the molecular arrangement of the arfvedsonite substance. The aegirine portions, which are wholly enclosed by the arfvedsonite, are of varying size, elongated in the direction of the vertical axis, irregularly bounded, and terminated at the ends by numerous splinters. The arfvedsonite portions are pure and without inclusions, the aegirine, on the contrary, often contains numerous small black grains, which may be of magnetite. The aegirine portions are often orientated in zones perpendicular to the vertical axis[1]). At the extreme end the section consists of a zone of pure aegirine, which, where it borders on the crocidolite, is quite colourless and without inclosures. This colour-

[1]) W. C. Brögger and K. J. V. Steenstrup describe (Zeitsch. f. Kryst. Vol. 16, p. 405, 1890) arfvedsonite crystals which are more or less completely altered into aegirine. These crystals, which were not, however, from Narsarsuk, but from the sodalite-syenite on the firth of Tunugdliarfik, are probably in the main of the same character as those described above.

less aegirine passes here into crocidolite. The line between them is well marked, but jagged. Bundles of crocidolite fibres intrude into clefts in the aegirine. Close to the boundary line the crocidolite fibres are arranged parallel to the *c*-axis of the other minerals, but at some distance from it they form the usual felt-like aggregate.

The foregoing shows that, as pointed out by Brögger[1]), crocidolite is formed from aegirine and, after an intermediate aegirine stage, also from arfvedsonite. But crocidolite may also be derived directly — without an intermediate aegirine stage — from arfvedsonite or riebeckite (?), as has already been pointed out and described by Ussing[2]). In cleavage fragments of arfvedsonite from Narsarsuk, which show no trace of the cleavages of aegirine, one sometimes observes inclusions of a blue, finely fibrous mineral, which evidently is crocidolite. In microscopical sections of such arfvedsonite, orientated parallel to the plane of symmetry, no aegirine is found. On the other hand, the fibrous portions are easily recognizable as crocidolite. The felt-like texture is here, however, seldom distinct; the fibres are arranged more or less parallel to the *c*-axis of the arfvedsonite. It is evident that the crocidolite has been formed here in the same way as asbestus is derived from common hornblende. It is thus probable enough that all the crocidolite occurring on Narsarsuk is the result of the alteration of aegirine or arfvedsonite.

17. Spodiophyllite.

When first observed at the locality, this mineral was supposed to be a species of chlorite. This supposition seemed to be corroborated by the determination of its specific gravity and

[1]) Zeitschr. f. Kryst. Vol. 16, p. 332, 1890.
[2]) This journal, Vol. 14, pag. 205, 1894.

hardness, both of which were found to agree tolerably well with those of chlorite. On ignition, however, the mineral proved to contain no water, and a complete analysis showed a composition which does not agree with that of chlorite or of any other known mineral. The mineral consequently being a new one, the name spodiophyllite[1]) is proposed for it on account of its colour and structure.

Spodiophyllite is met with only in crystals. These are bounded, as far as has been hitherto observed, only by the hexagonal prism and the base (Fig. 2, Plate V). Such individuals sometimes attain a length of 1^{cm} and a width of $5—6^{mm}$, but the majority of the crystals are much smaller in size. As no pyramidal faces have been observed, the axial ratio cannot, be given. Nor do the ordinary crystals offer any clue by which one could come to a decision of the question, whether the mineral belongs to the hexagonal or to the trigonal system. Hovewer, there sometimes occur a sort of embryonic formations of the mineral, of which Fig. 5 gives a diagrammatic representation. They consist of thin trigonal tables, often forming twins with the base as composition face and one individual revolved through 60° round the principal axis. This makes it most likely that the crystals of spodiophyllite belong to the trigonal system.

Owing to the micaceous cleavage of the mineral parallel to the base the crystal individuals easily break in this direction; they are, therefore, often terminated by cleavage surfaces. However, several crystals are not broken, but present at their ends real crystal faces. These are highly brilliant and generally perfectly even. Sometimes, however, there occurs on the basal plane a system of striations parallel to the hexagonal outline of this plane (Fig. 2, Plate V). Also lath-like elevations in the same orientation have been observed.

---

[1]) From *Σπόδιος*, ash-grey, and *Φύλλον*, leaf.

The faces in the vertical zone are always deeply striated parallel to the edges of the base, and no even or brilliant faces have been observed. The separate basal lamellae protrude or recede so as to form uneven, step-like surfaces. Sometimes corners protrude irregularly from the sides, and the result of a frequent repetition of this are individuals of nearly cylindrical habit. The lamellae here are in twin position with regard to each other, like the embryonic three-sided tables mentioned above.

These crystals also show another abnormal form, often having one end considerably thicker than the other (Fig. 3, Plate V). This is not a regular pyramidal development, but depends on the fact that the lamellae successively, though irregularly, decrease or increase in size. This is shown also by the circumstance that the striated or step-like lateral faces sometimes do not, even roughly speaking, present a plane surface, but are more or less concave, as is seen from Fig. 4, Plate V. Also the basal faces are strongly curved on several of these crystals. Such a deformation extends through the whole mass of the crystal individual. If an individual is convex at one end, it is concave at the other. If such a crystal is cleaved in a direction parallel to the base, each cleavage fragment forms a part of a hollow sphere conformable to the others. This is a fact sometimes observed in certain micas.

The colour of the mineral is, as its name indicates, generally ash-grey, on the base often pearl-grey. Sometimes the crystals show a tinge of liver-brown. The basal plane and the cleavage planes often show a distinct pearly lustre. Fracture in other directions is only faintly glimmering or quite dull. The powder has the same ash-grey colour as the mineral itself.

In microscopical sections the mineral is almost colourless. Only a faint tinge of yellowish grey is observable. In sections cut parallel to the principal axis, and consequently perpendicular to the cleavage direction of the mineral, this tinge is not very per-

ceptible. The light that vibrates perpendicularly to the vertical axis is somewhat more strongly absorbed than the light vibrating parallel to it. A section parallel to the base appears divided into zones parallel to the hexagonal outline of the basal plane. These zones are marked by different degrees of intensity of the faint yellowish grey colour. In general the outer parts have a higher colour than the central portions. The single zones sometimes appear as hair-like lines and are most distinctly defined. The mineral is uniaxial and the double refraction is negative and weak. The material available has not been suited for the determination of the indices of refraction.

The mineral scratches calcite with difficulty. Its hardness is, consequently, a little above 3. It has an eminent basal cleavage, which gives to it the character of a mica or chlorite. In a perfectly fresh condition, however, the mineral is not so easily cleaved as in a somewhat altered state. The mineral is very brittle and the cleavage laminae are neither flexible nor elastic.

The specific gravity, determined by weighing in benzole, is 2,633. Before the blowpipe the mineral fuses slowly to a clear and almost colourless glass. In the salt of phosphorus bead it gives a siliceous skeleton. With the other fluxes it reacts for iron and manganese. It is not attacked by acids other than hydrofluoric acid.

The analysis has been performed by myself. After drying the material until the weight at 100° C. is constant, it loses only about $^1/_4$ % on strong ignition. This loss has been considered as «hygroscopic» moisture not driven off at 100° and has not, therefore, been taken into account. The degrees of oxidation of the iron were determined after decomposing the mineral with dilute sulphuric acid and cryolite powder in a tube closed at both ends. Owing to the insufficient supply of material no test for fluorine could be made. The result of the analysis is as follows.

		Molecular ratios.	
SiO_2	53,61	0,8933	8
Fe_2O_3	11,24	0,1414	2
Al_2O_3	4,27	0,0838	
FeO	4,13	0,0574	3
MnO	0,64	0,0090	
MgO	10,16	0,2540	
Na_2O	8,55	0,1379	2
K_2O	7,80	0,0929	
	100,40		

The formula deduced from this analysis is

$$(Al, Fe)_2\,(Mg, Fe, Mn)_3\,(Na_2, K_2)_2\,Si_8\,O_{24},$$

which may be written structurally as follows.

$$\begin{array}{l} Na-SiO_3 \\ \quad\;\; SiO_3 \\ Al-SiO_3-Na \\ \quad\;\; SiO_3 \\ \quad\;\; SiO_3 \\ Al-SiO_3-Na \\ \quad\;\; SiO_3 \\ Na-SiO_3 \end{array} \begin{array}{l} \\ >Mg \\ \\ >Mg \\ \\ >Mg \\ \\ \end{array}$$

Consequently, the mineral is a metasilicate, being nearest to aegirine or arfvedsonite in composition, whereas on account of its other characters it might be referred to the mica, the chlorite, or, possibly, the pyrosmalite group.

Spodiophyllite has only been found at the locality No. 5 on Narsarsuk. The mineral occurred very sparingly on a few specimens. It is one of the earliest formed minerals at the locality, since individuals of spodiophyllite sometimes occur imbedded in aegirine crystals. Amongst the other minerals closely associated with the spodiophyllite the following ought to be mentioned: zircon of type II, ancylite, rhodochrosite, and albite, all of which are of later formation.

18. Eudialyte.

This mineral, which is so widely distributed in the Greenlandian sodalite-syenite, is of comparatively rare occurrence on the plateau of Narsarsuk. It has been met with at only one of the localities there, viz. No. 8. Here the eudialyte seems to be the mineral that has been last formed, as it fills the spaces between the other minerals. No idiomorphic crystal individuals have been found at the place; the mineral occurs only massive, and pure pieces nearly of the size of a man's fist can be obtained. The minerals with which the eudialyte occurs in contact are chiefly aegirine and feldspar.

No regular cleavage has been observable either macroscopically or in microscopic sections. Under the microscope the mineral is found to be traversed by numerous cracks, but they run quite irregularly and show every mark of not belonging to the mineral in its original state. The fracture is generally conchoidal, sometimes splintery. Specific gravity normal, *i. e.* 2,91. In the closed tube the mineral gives off water, which reacts faintly acid. At a red heat the loss in weight is, however, only 1,19 %.

The colour of the mineral is a vivid blood-red inclining on violet. This colour is considerably more intense than the colour of the common eudialyte from Kangerdluarsuk, which generally is brownish or verging on grey. The Narsarsuk eudialyte also has a more marked vitreous lustre than the common eudialyte. Where the mineral borders on aegirine or other minerals, *i. e.* in the outer parts of the eudialyte masses, and also along larger cracks that traverse them, it is lustreless, almost earthy and of a yellowish grey or brownish colour.

As neither crystal faces nor regular cleavage occur, microscopical sections orientated in fixed directions could not be produced. The preparations examined, which, consequently, have quite an arbitrary orientation, are clear and colourless with

no indication of pleochroism. The preparations consist partly of feebly doubly-refracting, partly of isotropic, portions. The doubly-refracting portions occur along cracks, which traverse the mineral reticularly. Between this mesh-work of doubly-refracting substance which follows the cracks, occur isolated isotropic portions. There is no sharp line between the isotropic and the doubly-refracting portions. Whether the double refraction is positive or negative, could not be decided. As the above-mentioned cracks are evidently secondary, the double refraction of this eudialyte must also be secondary. However, this seems to be at variance with the fact that all the doubly-refracting portions of the same section have uniform extinction. The trigonal eudialyte must originally have been doubly-refracting. Through some change in the molecular arrangement the whole mass has then become isotropic. In a third stage the mineral has become traversed by fine cracks, and on both sides of each crack it has again become doubly-refracting. Such a process seems to me to be more likely than that original double refraction should have remained along the cracks, while the portions not in contact with them should have become isotropic.

At all events the molecular rearrangements, from which the optical phenomena now described have resulted, are of no great consequence. This appears from the specific gravity of the mineral as well as from the loss on ignition, both of which agree with those of normal eudialyte.

A complete alteration resulting in the formation of new minerals has taken place in the outer parts of the eudialyte masses and along the larger cracks in them. In such cracks aegirine and zeolite substance have been deposited in crusts up to 5^{mm} in thickness. These alteration products together with several others also occur arranged in zones along the sides of the cracks and in those portions of the eudialyte, changed in colour and lustre, that border on the other minerals. The

new-formed aegirine individuals are occasionally fairly large and distinct, but the individuals of the other minerals are of minute size and indistinctly developed, so that they are hardly determinable. Thus one observes under the microscope numerous minute, strongly refracting and doubly-refracting grains, which probably consist of zircon[1]). They do not, however, show any trace of idiomorphic contours. There also occur yellowish brown flocks probably consisting of hydrated iron oxide etc. The marginal zones in which these alteration products occur are generally little more than a couple of millimeters in thickness, and the pure eudialyte substance passes into the pseudomorph mass, there being no sharp line between them.

In the Lütken collection was found a large pseudomorphous crystal, which proved to have the form of eudialyte[2]). Several such crystals have afterwards been found in different parts of the Narsarsuk plateau, but always detached, so that the place where they have formed could in no case be ascertained. Some of them measure more than 5^{mm} in diameter, and the crystal form of eudialyte is rather well preserved. The most common combination is represented by Fig. 6, Plate V. The forms present are

$$c = \{0001\},\ r = \{10\bar{1}1\},\ z = \{10\bar{1}4\},$$
$$e = \{01\bar{1}2\},\ m = \{10\bar{1}0\}.$$

As the base and the primitive rhombohedron are represented by faces of nearly the same size, the crystals assume the form of an almost regular octahedron. The resemblance to an isometric combination becomes the more conspicuous, as the faces e of the negative rhombohedron correspond to the faces of the cube and the forms m and z correspond to the rhombic dodecahedron. The faces are rather even, and the edges and

---

[1]) The presence of this mineral in eudialyte pseudomorphs from Siorarsuit has been shown by N. V. Ussing: This Journal, Vol. 14, p. 172, 1894.

[2]) Zeitschr. f. Kryst., Vol. 23, p. 366, 1894.

corners sharp. But the crystals are quite dull and earthy on the faces as well as on the fracture. Their hardness is sometimes so slight that pieces of them can be crushed between the fingers. In colour the pseudomorphs are brownish grey to yellowish grey.

In microscopic sections no trace of the original eudialyte substance can be detected. The whole forms an aggregate of various minerals. Among these — as also in the only partially altered eudialyte — we find: aegirine in more or less distinct individuals, zeolite in fibrous aggregates, zircon(?), and hydrated iron oxide. Besides these, there also occurs quartz in grains large enough to be perceptible to the naked eye.

19. Catapleiite.

This mineral was discovered nearly 50 years ago in the islets of the Langesund-Fjord in Norway. No other locality for catapleiite was known, until the existence of the mineral in the Lütken collection had been determined. This collection contained only a small quantity of catapleiite, and though the material afterwards collected by me at the Greenlandian locality is somewhat richer, catapleiite must, however, still be regarded as a mineral of rare occurrence on Narsarsuk. In the Lütken collection only one kind of catapleiite crystals was found; to this kind belong also the majority of the crystals found by me. Besides these, however, I have at the same time collected on Narsarsuk catapleiite crystals of two other kinds, so that at present there are three distinct types of the mineral.

Type I.

To the first type are referred crystals of the kind that was found in the Lütken collection, and which I have described in my article on this collection. Such crystals, mostly detached single individuals or small groups and fragments, were met with at the

locality in tolerably large number. On examining the new material I have not, however, found anything of importance to be added to my previous description. As to the combination of faces the crystals are very simple; being bounded only by the base, the hexagonal prism and a hexagonal pyramid, which could not with certainty be determined owing to the condition of the planes (Fig. 7, Plate V).

On a few small crystals among the new material, the pyramidal faces of which are somewhat brighter than the faces of those first examined, I have made some measurements which gave the following angular values:

$$(10\bar{1}3) : (0001) = 26°\,12',\ 25°\,54',\ 26°\,56',\ 26°\,41',\ 26°\,42'.$$

$$\text{Mean} = 25°\,27'.$$

All of these values are lower than the value calculated for the form $\{10\bar{1}3\}$, viz. 27°41′. However, the pyramidal faces are curved around the axis of the zone $[10\bar{1}0,\ 0001]$, and their lustre is best near the base and decreases towards the fundamental prism. It is probable, therefore, that the part of the face which gives the most distinct shimmer reflexion forms with the base a smaller angle that the face as a whole would do. On the ground of these measurements only, one is not, therefore, justified in assuming that the axial ratio of the Greenlandian catapleiite should be other than that of the Norwegian. Nor can any other simple symbol be derived from the values found than

$$y = \{10\bar{1}3\}.$$

This form also occurs, though rarely, on the catapleiite from Langesund; on type III, which is to be described below, it is constantly present.

The crystal individuals are grouped together in a great variety of positions. There is often a perfect intercrossing of

the tables. But a regular intergrowth that might be denoted as a twin formation I have not been able to ascertain. It is, indeed, attended with great difficulty to make out a possible presence of twins, where no faces but the base give distinct reflections.

Catapleiite of type I has been found on Narsarsuk only at the locality No. 3. The mineral occurred there almost exclusively as detached crystals or crystal groups. Not a trace of any other mineral was found grown together with them. Only on a couple of specimens catapleiite occurs in combination with other minerals. On one of these specimens the catapleiite crystals are implanted on albite crystals, which are, themselves, of secondary origin. On the other specimen numerous small catapleiite crystals occur implanted on aegirine individuals. From this it may be concluded that this kind of catapleiite is a secondary formation, though earlier than most of the numerous other secondary minerals that occur in this place.

Type II.

The catapleiite crystals of this type are much smaller in size than those of the foregoing type. They are not over 3^{mm} in diameter, and their greatest thickness is little more than $^1/_2{}^{mm}$. They are mostly aggregated into irregular druses which line the walls of small cavities in the syenite. Sometimes a rather large number of crystals are grown together in parallel or nearly parallel position, forming a crystal group with step-like sides.

These catapleiite crystals are also very simple with regard to the combination of faces. Only the following four forms have been observed.

$$c = \{0001\},\ o = \{10\bar{1}2\},\ p = \{10\bar{1}1\},\ m = \{10\bar{1}0\}.$$

The first three forms are always present (Fig. 8, Plate V).

The fundamental prism, on the contrary, is of rare occurrence and always subordinate. All the faces are very brilliant, but seldom perfectly even. The base is, as it were, broken into several fields which are not quite in the same plane. The pyramidal faces are generally striated longitudinally and, therefore, seldom give simple reflections.

Below are given the measurements obtained on some small crystals that gave tolerably simple and sharp reflections.

$(10\bar{1}2) : (0001)$		$(10\bar{1}0) : (0001)$	
	37° 52′		57° 26′
	37° 33′		56° 45′
	38° 9′		57° 8′
	37° 45′		57° 2′
	37° 40′		56° 51′
	37° 32′		56° 51′
	37° 40′		56° 26′
Mean	= 37° 45′	Mean	= 56° 26′

According to the axial ratio calculated for the Norwegian catapleiite

$$a : c = 1 : 1{,}3629,$$

the calculated angular values become respectively 38° 12′ and 57° 34′. There is here a real difference, as all the values found by me are lower than those calculated from the above-mentioned axial ratio.

However, these crystals seem to be only apparently hexagonal. The middle edge, which should be the combination-edge between $(10\bar{1}1)$ and $(10\bar{1}\bar{1})$, proves to be, on most of the crystals, a twinning-line between two halves with the base as composition-face. That the middle edge is in reality a twinning-line, is shown by the fact that the two halves do not quite cover each other, one of them reaching a little beyond the other at the edge. Narrow strips of the basal planes turned inwards are thus alternately visible round the crystal.

Occasionally a re-entrant angle is observable, formed by $(10\bar{1}1)$ on the lower half and $(10\bar{1}\bar{1})$ on the upper. The optically biaxial character of the mineral proves that its structure cannot be hexagonal, and the circumstance that the acute bisectrix is normal to the base refers the mineral to the rhombic system. If the mineral is referred to this system, we calculate from the angles

$$(110) : (1\bar{1}0) = 120° \text{ and } (111) : (001) = 59° 9'$$

the following axial ratios:

$$a : b : c = 1.73205 : 1 : 1{,}3411.$$

The forms present then become

$$c = \{001\},$$
$$o = \{101\} \text{ and } \{112\},$$
$$p = \{201\} \text{ and } \{111\},$$
$$m = \{100\} \text{ and } \{110\}.$$

By transmitted light these catapleiite crystals are like those of type I, *i. e.* they are faintly yellowish brown to nearly colourless. Their most marked characteristic is a splendid metallic iridescence exhibited by their faces. Probably owing to some thin surface film the faces exhibit very vivid rainbow colours, especially red and green. The basal plane generally displays a bright copper-red hue, but yellow, when the tarnish is thinner. The pyramidal faces, on the other hand, exhibit green to blue tints. These small crystals would probably not have been observed, had not their brilliant colour reflections attracted my attention.

In parallel polarized light the crystal tables prove to be composed of extremely thin lamellae crossing one another at angles of 60° or 120°. These lamellae however, seldom show total extinction in any direction, because lamellae in different directions almost always lie over and across each other.

Therefore a crystal table, seen in the orthoscope, looks like a fine network whose meshes show vivid interference-colours during the revolution. Exceptionally, however, some lamellae or groups of lamellae showing tolerably perfect parallel extinction may be observed. In the conoscope such fields show a biaxial figure with the bisectrix at right angles to the base of the table. The angle between the optic axes is small, and the figure is never quite distinct.

With regard to their mimetic structure, these crystals, when heated, show a far greater constancy than those of type I. At a temperature below 150° C. they remain unchanged. Only at a higher temperature the lamellae commence to vanish, but not even at 200° is the whole section isotropic. A higher temperature could not be employed without danger to the microscope.

Owing to the scanty supply of material, the catapleiite of this type has not been completely analyzed. I have only satisfied myself that this material also consists of pure soda catapleiite without any ascertainable trace of lime.

The catapleiite crystals now described have been found on Narsarsuk only at the locality No. 11. After the loose gravel had been removed, the syenite, which is traversed by fissures, was found to be pegmatitic with large individuals of aegirine and feldspar. Between these there were several small cavities, in which the catapleiite had crystallized out. In the same drusy cavities there also were found small black rhombohedra of rhodochrosite and columnar epididymite with the same iridescent tarnish as on the catapleiite crystals. There also occurred, though very sparingly, another mineral in the form of small white prismatic crystals with pyramidal terminations, which somewhat resemble zircon. The spaces between the crystals were partly empty, partly filled with a dark brown, earthy substance, which is widely distributed among the minerals on Narsarsuk.

Type III.

The catapleiite crystals of the third type are also small, attaining a breadth of $^1/_2$ cm at most and a thickness of one or two mm. They are, consequently, rather thick compared with those of type II as well as in proportion to their width. Strictly speaking, only one specimen with typical crystals of the kind in question has been found. On this, however, there is plenty of material, as it consists for the most part of catapleiite crystals. These are comparatively rich in faces and excellently developed. Besides, I found a number of specimens with catapleiite crystals somewhat differing from these, but which may justly be referred to the same type. They are less perfectly developed with regard to their faces, as only the base is plane and brilliant, while the rest of the crystal is so rounded that pyramidal and prismatic faces can hardly be determined. In colour, lustre and mode of occurrence, however, they perfectly agree with the better developed crystals of the third type. Whether the imperfect development of these crystals is original or secondary, cannot, probably, be determined with certainty.

On the perfectly developed catapleiite crystals of the third type the following forms occur:

$$c = \{0001\},\ m = \{10\bar{1}0\},\ y = \{10\bar{1}3\},\ o = \{10\bar{1}2\},$$
$$p = \{10\bar{1}1\},\ x = \{20\bar{2}1\}.$$

This complete combination is represented by Fig. 9, Plate V. In general all the faces of the forms are present on every crystal individual. Among the pyramidal faces those in the middle, o and p, are generally somewhat wider than the two others, but also y is often rather wide. All the faces are, as a rule, very smooth and give excellent reflections, so that very accurate measurements could be made. The results obtained on a crystal excellently developed on all sides are given below. The calculated values annexed are referred to the axial ratio established for the Norwegian catapleiite.

811644

		Measured			Mean	Calculated
$(10\bar{1}0)$	$(01\bar{1}0)$ =	60° —′	60° 13′	60° —′		
		59° 54′	59° 55′	59° 58′	60° —′	60° —′
$(10\bar{1}3)$:	(0001) =	27° 5′	27° 26		27° 15½′	27° 41′
$(10\bar{1}2)$:	(0001) =	37° 48′	37° 57′	38° 5′	37° 57′	38° 12′
$(10\bar{1}1)$:	(0001) =	57° 13′	57° 25′	57° 3′	57° 20′	57° 34′
$(20\bar{2}1)$:	(0001) =	72° 1′	72° 16′	72° 11′	72° 9′	72° 22½′

As was the case with the foregoing types, all the measured angles show lower values than those calculated. It is, therefore, evident that the geometrical constant for the catapleiite from Narsarsuk differs somewhat from that of the mineral from Langesund. The Greenlandian mineral is pure soda-catapleiite. At the Langesund locality occur both soda- and lime-soda-catapleiite. However, no divergency in the axial relations seems to have been found between the two Norwegian varieties, and it seems to be from the measurements made on the soda-catapleiite that the axial ratio has been calculated. Difference in chemical composition, therefore, can hardly be the cause of the discrepancy between the minerals from the two localities with regard to the dimensions of their angles.

From the mean value

$$p : c = 57° 20'$$

the following axial ratio is calculated for the Greenlandian catapleiite:

$$a : c = 1 : 1{,}3509.$$

According to this axial ratio the relation between measured and calculated values becomes as follows:

	Measured	Calculated
$y : c$ =	27° 15½′	27° 28′
$v : c$ =	37° 57′	37° 57′
$p : c$ =	57° 20′	57° 20′
$x : c$ =	72° 9′	72° 14′

The catapleiite crystals of type III, like those of the foregoing type, are all twins with the base as composition-face. On each individual a more or less distinct twinning-line is observable running along the faces of the fundamental prism round the crystal complex. Such a twin formation would not, of course, be possible, if the mineral were holohedral hexagonal.

In a perfectly unaltered condition the catapleiite crystals are colourless and clear. Often, however, they show a faint brownish tarnish. Crystals that have been long exposed to atmospheric action, are enamel-white and opaque. They often exhibit an iridescent shimmer.

Fig. 10, Plate V represents a section of a crystal of type III, cut parallel to the base. It has been cut so that the whole of it is on the same side of the horizontal twinning-line. The section consists of two portions meeting in an irregular line: *a* isotropic, and *b* doubly-refracting. The field *a* shows in the conoscope a regular uniaxial interference figure of positive character. The field *b* shows in the orthoscope extinction parallel to the edge m''. In the conoscope this field shows a biaxial interference figure. The axial plane is parallel with m'', and the axial angle, measured by means of a micrometer ocular and Schwartzmann's scale, has been found to be

$$2E = 30°.$$

The field *b* is traversed by a number of lamellae as thin as a hair, orientated partly parallel to m', partly to m'''. These lamellae are, however, so minute as not to affect the interference figure, which is sharply defined and regular. The character of the double refraction is here also positive.

Already at a temperature of 30° the double refraction of this section is totally lost; on cooling it returns to its original condition. The heating makes the whole section uniaxial positive. The mimetic structure is, then, here less constant by far than with the first two types. Even by being enclosed in the warm hand the section becomes isotropic. This molecular rearrange-

ment, consequently, takes place within a range of temperature of 10°—20°.

For the analysis material was taken from the specimens with imperfect crystals. The specific gravity was found, by weighing in benzole, to be 2,781. The mineral yields all its water at a low red heat. At this temperature the powder does not fuse at all, but it becomes insoluble in acids in which it is easily soluble before ignition. In the analysis one gets a considerable part of the zirconia together with the silicic acid, from which it is liberated by hydrofluoric acid and sulphuric acid. The zirconia in the solution is precipitated together with the ferric oxide by ammonia. Iron and zirconia are separated by sulphide of ammonium in the presence of tartaric acid. The analysis gave the following result:

		Calculated.
SiO_2	44,70	45,05
ZrO_2	30,85	30,43
FeO	0,71	—
Na_2O	14,09	15,51
H_2O	9,07	9,01
	99,38	100,00

The annexed calculated percentage composition is obtained from the formula

$$Na_2SiO_3 \cdot H_4Zr(SiO_4)_2.$$

Catapleiite crystals of type III have been found on Narsarsuk only at the locality No. 3, the same place where those of type I were met with. Only loose specimens bearing the mineral were observed, and as no trace of the catapleiite of type I occurred on them, the mutual relation of the two types with regard to their order of formation etc. cannot be decided. The most important minerals that accompany the catapleiite on the specimens, are feldspar, fine-grained; aegirine in small,

needle-shaped individuals, elpidite in white columns often in parallel, sometimes in radiated groups, and black pseudomorphous rhombohedra of rhodochrosite.

20. Zircon.

In the Greenland syenites the occurrence of zircon as a macroscopic mineral is probably rather rare. Only in the small islands of Kitsigsut off the coast between Sanerut and Nunarsuit it occurs, according to the statement of Giesecke[1] in a quantity worth mentioning. In the sodalite-syenite on the firths of Kangerdluarsuk and Tunugdliarfik zircon has only been found as a microscopical alteration product of eudialyte[2]. In the Lütken collection only a single zircon crystal has been found[3]. As, however, this crystal did not resemble any one of those which I have afterwards found on Narsarsuk, it probably was derived from some other locality.

The zircon individuals found on Narsarsuk are with regard to their crystallographic development of two distinct and well-marked types, which are described below.

Type I.

To this type we refer crystals of the very common development represented by Fig. 1, Plate VI. The largest individuals that have been met with measure about 2 cm in length by nearly the same thickness. No other forms than those figured have been observed. They are

$$m = \{110\},\ p = \{111\},\ u = \{331\}.$$

The prism of the first order m and the fundamental pyramid, p, are the predominant forms. The faces belonging to the

---

[1] Giesecke's Mineralogiske Reise i Grønland, Copenhagen, 1878.
[2] This Journal, Vol. 14, 1894, p. 172.
[3] Zeitschr. f. Kryst., Vol. 23, 1894, p. 366.

form *u* are always narrow; sometimes they are hardly perceptible. The faces are usually more or less curved; sometimes the whole crystal is bent like a saddle or otherwise distorted. On some individuals there are wide open cracks stretching far into their interior. They are probably due to some secondary deformation.

In colour the crystals are ash-grey faintly inclining to brownish. In small individuals a faint tinge of amethyst or lilac colour is observable. The mineral is translucent only in thin splinters. The crystal faces have a peculiar silky lustre. Often also a sort of pearly lustre occurs, not only on the prismatic, but also on the pyramidal faces.

The zircon crystals of this type belong to the earliest of the secondary minerals. They are always found immediately implanted on the primary microcline individuals. These being, as usually, coated with a crust of albite, the zircon crystals are sunk or imbedded in this crust and, consequently, older than the albite. Moreover, green, translucent aegirine needles of later formation occur upon the zircon crystals. This zircon was found at the locality No. 5 and in its nearest surroundings. It is by no means of rare occurrence there.

Type II.

The zircon crystals of type II are of smaller size than those just described. The largest individuals are about 1^{cm} in diameter. They are generally bounded only by the fundamental pyramid *p*, with which the tetragonal prism of the second order *a* (Fig. 11, Plate V) is sometimes subordinately combined. As a rule, the crystals are well developed with smooth and brilliant faces. In colour they are hair-brown to nearly black. They are thus considerably darker than zircon usually is. The mineral has a vitreous to adamantine lustre and is weakly trans-

On account of its unusual form, colour, and lustre, on was at first taken for quite a different mineral. It

was only by a chemical examination that its true character was ascertained. The mineral was found only at the locality No. 5, and in small quantity. The two types of zircon, thus, occur associated. However, they apparently belong to two different generations. The crystals of the second type belong to a far later epoch of formation than those of the first type. They generally occur implanted on aegirine and are surrounded by the same mineral in the form of green translucent needles, which are of secondary origin. Associated with them occur further the minerals ancylite and yttria-apatite, both of which belong to a comparatively late generation.

The optical properties of the two crystal types are quite the same. Sections orientated perpendicular to the vertical axis show very distinct cleavages parallel to faces of the prism of the first order. Parallel to the same directions the mineral is also divided into differently coloured zones. Sometimes there is a large square central field, which is almost colourless and surrounded by a broader marginal zone, which has a tolerably intense yellowish brown colour. Sometimes the central field is yellowish brown and the marginal zone colourless. The colourless portions of the sections often contain numerous grey inclusions thickly scattered through the substance, which do not, even when highly magnified, show any regular outlines. Not infrequently they are zonally arranged parallel to the aforesaid zones. Generally there are several zones of coloured and of colourless substance from the centre to the outline of the section. The outermost zone is always uncoloured, but very narrow. Sometimes there is also a zonal structure parallel to the tetragonal prism of the second order ($a = \{100\}$). This structure is often perceptible only under high magnifying powers in the outer parts of the section. When a coloured zone, *e. g.* parallel to (110), borders upon a colourless one, *e. g.* parallel to $(1\bar{1}0)$, the line between them (parallel to (010)) is very sharp. The double refraction is positive and the same in the differently coloured zones.

21. Analcime.

The only zeolites met with on Narsarsuk are analcime and natrolite. They were found closely associated at the locality No. 2, both in small quantities. Besides calcite and rhodochrosite, they are the last-formed minerals at this locality. The minerals of the immediately preceding generation, on which these four minerals are implanted, are microcline and aegirine. The microcline is, as usually, coated with crystals of albite in parallel orientation. The albite crystals are partly of the usual habit, *i. e.* tabular parallel to the second pinacoid, and partly prismatic or needle-shaped parallel to the *c*-axis, being analogous to the albite crystals from Lille Aröe near Langesund previously described by the author [1]). The calcite, which seems to be the oldest of the four latest formed minerals, consists partly of small crystals bounded by the faces of the fundamental rhombohedron, and partly of spathic masses forming the immediate substratum to which the analcime crystals are attached.

The largest analcime crystals attain about 1 cm in diameter. They are closely aggregated into druses and crusts, so that on each individual only a few faces have been developed. On these crystals the common icositetrahedron $n = \{211\}$ is the only form that has been observed. The freely developed faces are smooth and brilliant. The colour generally is enamel-white, but not infrequently the mineral presents a bluish tinge. When it could not assume a regular crystal form, it often has a yellowish colour.

The optical anomalies of analcime from other localities are also exhibited by the analcime from Narsarsuk. Fig. 2, Plate VI gives a somewhat diagrammatic representation of a section orientated parallel to a cubic face, as it appears under the microscope. It is divided by irregular lines into eight fields, of which every two opposite ones have the same optical orientation. Each field

---

[1]) Bull. of the Geol. Inst. of Upsala, Vol. IV. 1898, p. 23.

consists of two systems of crossing twin-lamellae. One system runs parallel to the outer edge of the section, the other is at right angles to it. The whole section is doubly refracting. The extinction-directions make angles of 60° or 30° with the longitudinal direction of the twin-lamellae. As, now, the outer edges of the section and, consequently, the twin-lamellae make angles of 63° 26′ and 26° 34′, respectively, with the rectangular axes of symmetry a and b, it follows that the extinction-direction, *e. g.* in the fields I makes an angle of 3° 26′ with the direction $a—a$. The fields II have an equal angle of extinction on the other side. The fields III become dark simultaneously with I, and the fields IV simultaneously with II. If the section is placed in such a position that the directions $a—a$ and $b—b$ coincide with the principal planes of the nicols, the extinction is nearly total and quite the same throughout the section. If it is revolved about $3^1/_2°$ to the right, total extinction in the fields I and III ensues; if it is revolved as far to the left, the fields II and IV become quite dark. It is, however, only the vibration-directions that coincide in the fields I and III on the one side, and in the fields II and IV on the other. The direction of the greatest velocity of light in the fields I is in the fields III the direction of the least velocity, and the same is the case with the fields II and IV with regard to each other. If, therefore, the section is placed so that the directions $a—a$ and $b—b$ make an angle of 45° with the principal section of the nicols, and a sensitive gypsum plate (red of the first order) is inserted between the section and the analyzer, the fields I and II show the same interference colour and the fields III and IV the complementary colour.

22. Natrolite.

This zeolite occurs on Narsarsuk still more sparingly than analcime. Only three or four pieces with small crusts

of this mineral have been found. These natrolite crusts generally occur upon the analcime druses. They are consequently younger than these. The natrolite crystals are not over two mm. in length and about $^1/_2$ mm thick. In general they occur in parallel position implanted perpendicularly on their substratum. This consists in most cases of a crust of massive natrolite a couple of millimetres in thickness, which sometimes stands on the edge so that crystals can grow out on both sides. The crystals generally stand so thick that they are nearly in contact with each other. As to the combination of faces these natrolite crystals present nothing remarkable. They are bounded by the forms usually occurring on this mineral, viz.

$a = \{100\}$, $b = \{010\}$, $m = \{110\}$, $o = \{111\}$.

As shown by Fig. 3, Plate VI the prism of the third order, m, predominates in the vertical zone. Of the two pinacoids, b generally has the broadest faces. The faces belonging to the pyramid o are generally somewhat concave. All the faces are dull or but faintly shimmering; it has not, therefore, been possible to make any accurate measurements on them. In colour the crystals are milk-white and opaque. They are rather brittle, so that they easily break when touched. On the fracture one perceives that only the outer covering is opaque and that they contain a clear and brilliant core.

Fig. 4, Plate VI shows a section of a natrolite crystal as described above and orientated parallel to the second pinacoid, b. Only the central portion, a, consists of fresh, undecomposed natrolite with tolerably strong double refraction. The line that separates the marginal zone and the central part is quite sharp and straight. The outer zone consists of an aggregate of fine fibres whose longitudinal direction is at right angles to the line between the outer and the central portions. The direction of the least velocity of light is in these fibres longitudinal, as is the case with the fresh natrolite. But the double refraction is considerably weaker in them than in the fresh mineral.

23. Biotite.

With the exception of polylithionite, which is of secondary formation, mica is a mineral of rare occurrence on Narsarsuk. Only a few plates which are portions of larger crystals of black mica have been met with. As these have been found lying loose, not attached to any other minerals, it cannot be determined how the mineral originally occurred in situ. No doubt, however, this mica is one of the primary minerals of the pegmatite.

The largest crystal plate found here is $5^1/_2$ cm wide, and is bounded at the outline by the faces of the second pinacoid, {010}, and of the prism of the third order, {110}. As these make angles of about 120° with one another, the cleavage plates have the form of hexagonal tables. In tolerably fresh portions the colour is a pure black sometimes with a greenish reflection. Only very thin scales are translucent with a greenish brown colour. The mineral is nearly optically uniaxial. The black cross of the axial image opens only very little, when the plate is revolved. If the mineral is to be regarded as biaxial, the axial plane is parallel to the second pinacoid.

However, this mica is almost wholly altered into chlorite. Only small portions have retained their lustre, cleavability and translucency. For the most part the mineral is dull, brittle and opaque. The altered portions are partly dark ash-grey, partly of a reddish brown copper colour.

It is very probable that this mica is closely related to the lepidomelane from Langesund in Norway, described by Brögger [1]). But no chemical examination of the scanty material has been made.

---

[1]) Zeitschr. f. Kryst. Vol. 16, 1890, p. 189.

24. Zinnwaldite (Polylithionite).

J. Lorenzen examined and described a species of mica from Kangerdluarsuk, which he found to contain a considerably greater percentage of lithia than any other known kind of mica; on account of this he called it polylithionite [1]). Optically this mineral described by Lorenzen does not differ from zinnwaldite, *i. e.* its optic axial plane is parallel to the crystallographic plane of symmetry. It occurs associated with steenstrupine and albite in sodalite-syenite on the firths of Kangerdluarsuk and Tunugdliarfik, often in very large tabular individuals arranged in rosettes having no regular crystallographic boundaries.

The lithia-bearing mica from Narsarsuk which is to be described below, has been previously observed in the Lütken collection, where, however, it was found in very small quantity. On the material available it was, however, possible to ascertain the agreement in the optical orientation with that of zinnwaldite: the plane of the optic axes was found to be parallel to the second pinacoid, and the angle between the axes was comparatively large. It was further shown that the mineral contained a large amount of lithia. Sufficient material for a quantitative analysis could not be procured. Nor were any determinable crystals met with [2]).

In the collections which I have brought home from Narsarsuk this mineral occurs on a large number of specimens, but always in small quantities. It occurs developed as more or less distinct crystal tables, which seldom are more than 5^{mm} in breadth and 1^{mm} in thickness. They are generally nearly round or present an irregularly lacerated edge. This irregular outline often seems to be of secondary origin, as such imperfect crystals for the most part occur on specimens that have

---

[1]) This Journal. Vol. 7, 1893, p. 43.
[2]) Zeitschr. f. Kryst. Vol. 23, 1894, p. 367.

obviously been long exposed to the action of atmospheric agents. On such specimens, on the other hand, as have not been subject to atmospheric influence, the crystal tables are sharply developed.

The complete combination of the forms occurring on these crystals is shown by Fig. 5, Plate VI. When the third pinacoid c is not a cleavage face, but the original crystal face, it gives a very sharply defined and simple reflection. The lateral faces, on the contrary, are, as usual with the micas, so deeply striated that accurate measurements can only in rare cases be obtained from them. However, the values found show clearly enough that the axial ratios and the forms of this mica agree very closely with those of biotite.

Referred to the axial ratios calculated for biotite from the measurements of G. vom Rath [1], viz.

$$a : b : c = 0{,}57735 : 1 : 3{,}27432; \quad \beta = 90°,$$

the forms observed on the zinnwaldite from Narsarsuk have the following symbols:

$c = \{001\}$, $b = \{010\}$, $H = \{201\}$, $\gamma = \{017\}$, $\delta = \{\bar{1}.1.11\}$, $q = \{\bar{1}14\}$, $\mu = \{\bar{1}11\}$, $\eta = \{\bar{2}21\}$.

The determination of these forms is based on the following measured angles:

	Measured	Calculated
(201) : (001) =	85° 38′	85° 8′
(017) : (001) =	24° 41′	25° 4′
($\bar{1}$. 1. 11) : (001) =	30° 37′	30° 38′
($\bar{1}$14) : (001) =	58° 50′	58° 35′
($\bar{1}$11) : (001) =	81° 40′	81° 40′
($\bar{2}$21) : (001) =	85° 44′	85° 38′
(010) : (001) =	90°	90°

[1] Pogg. Ann. Ergänzungsbd. VI, 1874, p. 366.

In most cases the crystals form nearly regular hexagonal tables, the faces of the second pinacoid being of about the same size as those of the prisms of the fourth order. Sometimes, however, the second pinacoid is totally absent, so that only the prismatic forms remain as the lateral boundary of the crystals. Such crystals have a rhombic outline with the a- and b-axes as diagonals. The plane angles on the third pinacoid are 55° and 125°.

Of the forms enumerated above only the following have been previously observed on zinnwaldite from other localities:

$$c,\ b,\ H,\ \text{and}\ \mu.$$

The form q has been observed before on biotite. Consequently the forms

$$\gamma,\ \delta,\ \text{and}\ \eta$$

are new for zinnwaldite as well as for the mica group in general.

The zinnwaldite crystals from Narsarsuk are very often subject to twin formation. This follows the common law: the twinning plane = the third pinacoid; the twinning axis, about which one individual is revolved 60°, is a normal to this pinacoid. This twinning is often repeated, so that a large number of individuals, each in twin position with reference to its neighbour, unite so as to form a thick table or a column prolonged in the direction of their common c-axis. Each separate twin lamella in these aggregations is often very thin, and the twinning is then generally shown by a strong horizontal striation of the lateral faces. This striation is due partly to the salient and re-entrant angles which the lateral faces of contiguous lamellae make with each other, partly and especially to the circumstance that the single lamellae in twin position do not fully cover each other, the angles of their outline not being precisely 60° and 120°. If the separate individuals have the form of rhombic tables (when the second pinacoid is absent), the twins will bear a certain resemblance to the corresponding formations of eudidymite.

In thin laminae the mineral is colourless. Thicker plates are of yellowish colour faintly inclining to green. The faces of the third pinacoid display a fine pearly lustre. In parallel polarized light cleavage plates show total extinction parallel and perpendicular to the second pinacoid. In the conoscope the same plates show a biaxial interference figure. The plane of the axes is parallel to the second pinacoid. The acute bisectrix makes in front of the c-axis an angle of about 7° with this axis. The apparent axial angle, $2E$, as determined by the micrometer ocular and Schwartzmann's scale, is about 60°. The double refraction is negative as in all other micas.

The specific gravity of the mineral was found, by weighing in benzole, to be 2,701. Hardness = 2,5. The mineral is tough, but not very elastic. Its cleavage is not quite so perfect as with most other micas. Only with difficulty can the mineral be pulverized.

Before the blowpipe it fuses easily to a colourless, blebby glass, imparting an intense red colour to the flame. It is not perfectly decomposed by any acid other than hydrofluoric acid.

The analysis was made by myself on three different portions of the material. In the first, which was subjected to an alkaline carbonate fusion, SiO_2, Al_2O_3, Fe_2O_3, and MnO were determined. In the second, which was brought into solution by a mixture of hydrofluoric and sulphuric acids, the alkalies were determined, the lithium being separated by amylic alcohol according to the method of Gooch[1]). The fluorine was determined in a third portion, which was fused with soda according to the method of Berzelius. The analysis yielded the following result.

---

[1]) Bull. of the U. S. Geol. Survey. No. 42, 1888, p. 73,

		Molecular ratios		
SiO_2	58,68	0,9780		16
Al_2O_3	10,24	0,2008	0,2510	4
Fe_2O_3	4,02	0,0510		
MnO	0,31	0,0020	0,4202	7
Li_2O	8,24	0,2747		
K_2O	11,05	0,1175		
Na_2O	1,61	0,0260		
F	8,16	0,4294		7
	102,31			
O	3,44			
	98,87			

This gives for the mineral the following empirical formula:

$$(Al, Fe)_4 (Li_2, K_2, Na_2)_7 F_2 Si_{16} O_{45}.$$

This analytical result agrees fairly well with that obtained by Lorenzen for polylithionite. The only important difference is that in the mineral from Narsarsuk sodium is almost entirely replaced by potassium. This is the more remarkable as in the Narsarsuk minerals in general sodium is decidedly the predominating alkali metal. The composition of polylithionite differs from that of common zinnwaldite by a higher percentage of alkalies, especially of lithia, owing to which the percentage of silicic acid is also larger.

It has not been fully ascertained that zinnwaldite occurs elsewhere on Narsarsuk than at the locality No. 2. The mineral is found there implanted on feldspar as well as on elpidite. Occasionally the zinnwaldite tables are in part imbedded in the feldspar crystals. This does not, however, prove that the whole of the feldspar is later than the zinnwaldite or formed simultaneously with it. The fact is that at a comparatively late period of formation, when the zinnwaldite, which no doubt is of secondary origin, had already crystallized out, feldspar

substance has been deposited upon the original feldspar crystals and in parallel orientation with reference to them. The zinnwaldite also proves to be later than the elpidite. On the other hand, parisite, cordylite, ancylite and yttriumapatite are all of later origin than the zinnwaldite.

25. Tainiolite.

The investigation of this mineral has been attended with considerable difficulty, and the results obtained are such that the mineral cannot be said to be fully determined. This is especially the case as regards its chemical composition, because for want of a sufficient quantity of pure material a complete analysis could not be made. The material was also not altogether suitable for crystallographic examination, and for the results obtained no high degree of accuracy can be claimed.

Already when I observed this mineral on Narsarsuk for the first time, I clearly saw that it must be a mica, though the crystals had a habit that had not before been observed in any species of mica. This view was confirmed by the angular measurements which I made afterwards; though they could not be made with great accuracy, yet they showed that all of the forms present corresponded to known forms on other minerals of the mica group. And when at last the blowpipe examination of the mineral proved that it contained a considerable amount of lithia, there seemed to be sufficient reason for considering it as a variety of polylithionite [1]). Only after prolonged and laborious efforts could a small amount of pure material be obtained, on which an analysis was undertaken. Though this analysis could not be made complete, it fully showed that the

[1]) Figs. 9 and 10 on Plate III are there denoted as »polylithionite», which should be altered to »tainiolite».

mineral is not identical with any one of the species of mica hitherto known, but that it must be regarded as a new member of the mica group.

The name of tainiolite that I have given the mineral is derived from the Greek words *ταινία*, a band or strip, and *λίθος*, a stone, because the crystals always have the form of bands or strips.

Tainiolite has been found only as crystals, and the crystal individuals are, without exception, very small. The largest individuals observed measure 5^{mm} in length by 1^{mm} in breadth, and the thickness is generally extremely slight, even to such a degree that they bend when one blows on them.

Like the other micas, tainiolite belongs to the monoclinic crystal system. As already stated, the crystals do not allow of any accurate angular measurements. It is not, therefore, worth while calculating axial ratios for the mineral from the measurements obtained. Such ratios would at all events differ but slightly, if at all, from the axial ratios given for the biotite on page 111, viz.

$$a : b : c = 0{,}57735 : 1 : 3{,}27432. \quad \beta = 90°.$$

These axial ratios may then, for the present, be regarded as applicable also to tainiolite. Referred to these axial ratios, the forms observed on this mineral have the following symbols (Fig. 9, Plate III):

$$c = \{001\}, \quad b = \{010\}, \quad e = \{023\},$$
$$\vartheta = \{027\}, \quad \mu = \{\bar{1}11\}.$$

These forms have been determined from the following angular values:

	Measured	Calculated
(010) : (001) =	90°	90°
(023) : (001) =	65° 9′	65° 23′
(023) : (010) =	24° 44′	24° 37′

	Measured	Calculated
(027) : (001)	= 43° 33′	43° 6′
($\bar{1}$11) : (001)	= 81° 28′	81° 19′
($\bar{1}$11) : (010)	= 60° 27′	60° 23′
($\bar{1}$11) : ($\bar{1}\bar{1}$1)	= 60° 15′	59° 14′

The tainiolite crystals form elongated bands or strips, attached by one end. The longitudinal direction of these crystals is parallel to the crystallographic a-axis. In the longitudinal zone they are generally bounded only by the faces of the third and the second pinacoids. They are flattened parallel to the former form, and owing to the thinness of the individuals it is in most cases impossible to determine the faces of the second pinacoid. Only as rare exceptions one meets with crystals thick enough to allow of the determination of these faces. However, individuals have been found with a thickness even equal to their breadth. Such individuals show not only the second pinacoid distinctly developed, but also the forms e and ϑ (the prisms of the first order).

The unattached end of the crystal bands generally is indistinctly or irregularly bounded. The thin individuals are either split up at the end into a number of points or irregularly rounded. Also the thicker individuals show in general an indeterminable rounding of their unattached end. Only on a few crystals a couple of terminal faces could be determined as belonging to the form μ.

Fig. 9, Plate III represents a combination of the determinable forms (with the exception of ϑ) as occur on crystals of tolerable thickness. On the thin crystals the faces of the third pinacoid are always smooth and brilliant. On the thicker individuals these faces generally are striated longitudinally, which striation is due to an alternation of the principal face c and the contiguous forms ϑ or e. The faces of all the other forms are strongly striated parallel to the direction of micaceous cleavage in the mineral.

Twinning is extremely rare among the tainiolite crystals; only a single twin crystal has been found. It is a contact twin, represented by Fig. 10, Plate III. One of the individuals crosses the other at an angle of 60°; their composition face is the third pinacoid. It looks as if one of the individuals were lying loose on the other. This form of twinning is exactly the same as that occurring with epididymite.

The mineral is colourless and usually pefectly clear. The thicker individuals, however, show a distinct tinge of blue. Lamellae parallel to the third pinacoid show in parallel polarized light total extinction parallel to the second pinacoid, with which also the plane of the optic axes is parallel. The acute bisectrix emerges in front of the *c*-axis, making an angle of about 5° with it. The apparent angle between the optic axes is perceptibly smaller than with polylithionite. With the aid of the micrometer ocular and Schwartzmann's scale the angle $2E$ was found to be about 50°. The double refraction is negative and not very strong.

The hardness of tainiolite could not be determined with accuracy. There is, however, no reason for assuming it to differ essentially from the hardness of other species of mica, *i. e.* 2,5 — 3. The cleavage of the mineral is as eminently perfect as in muscovite. If the strips are gently bent to a slight extent, they will resume their original position. The limit of elasticity may, however, easily be exceeded, for when bent with some force the individuals will remain curved.

By weighing in benzole the specific gravity of the mineral has been found to be 2,86 (at a temperature of 16° C., Manzelius).

Before the blowpipe in the forceps the mineral fuses easily to a colourless blebby glass colouring the flame intensely red. It is completely, but somewhat slowly decomposed by hydrochloric acid.

As already mentioned, it has been troublesome to pro-

cure the material for a chemical analysis. As the difficulty offered in this respect was already seen when the mineral was discovered at the locality, a comparatively large number of specimens on which the mineral occurred were collected. From these the diminutive crystal strips have been detached and examined. Many of the individuals proved to be so intimately associated with minute scales of graphite, feldspar splinters etc., that they could not be used, but had to be rejected. The whole quantity of pure material which could thus be obtained, amounted after having been dried at 110° C., only to 0,0970 gr. On this small quantity the analysis has been performed by Mauzelius with the following result.

		Molecular ratios		
SiO_2	52,2	0,864		3,07
Al_2O_3	2,7	0,072		
FeO	0,6	0,008	0,559	2,00
MgO	19,1	0,473		
K_2O	11,5	0,122		
Na_2O	1,8	0,029	0,264	0,94
Li_2O	3,8	0,113		
Loss	8,7	0,483 *)		1,72
	100			

*) Calculated as H_2O.

On the assumption that the loss in the analysis is water, the chemical formula of the mineral would consequently be

$$3\,SiO_2 \cdot 2\,MgO \cdot (K_2, Na_2, Li_2)\,O \cdot 2\,H_2O$$

or

$$(MgOH)_2\,(K, Na, Li)\,Si_3O_8 + H_2O.$$

The loss in the analysis can hardly be anything but water or fluorine, most probably both. As, however, hydroxyl and fluorine often play the same part in minerals, replacing each other isomorphously, and as, moreover, these two substances have nearly the same molecular weight, it is of but little im-

portance with regard to the formula for the mineral, whether one or the other of them is present. At all events the composition of the mineral is very remarkable, as it most essentially differs from the composition of every other species of mica hitherto known. Yet there can be no doubt but the mineral is a member of this group. The physical as well as the geometrical properties of tainiolite are all in perfect accordance with those of the minerals of the mica group. As well known, this group presents great heterogeneity in chemical composition, and as yet no acceptable generalisation can be said to have been attained in this respect. Each new member that is discovered will contribute to throw light upon the whole. It is therefore highly desirable that a sufficient amount of tainiolite may be procured for a complete analysis. As the mineral is not very rare at the locality, this is by no means beyond possibility.

Tainiolite has been found only at the localities Nos. 1 and 6 on Narsarsuk. The mineral is here developed in small drusy cavities, in the interspaces between larger crystals of feldspar and aegirine. The tainiolite strips occur generally attached to the feldspar, often in part implanted in it, and then so firmly that they can only with great difficulty be detached. The most noteworthy among the accompanying minerals is narsarsukite; it was in searching for this mineral that tainiolite was discovered. Another mineral that is a constant companion of tainiolite is graphite in small brilliant rounded crystal plates.

26. Neptunite.

A brief summary of the description of this mineral previously published by me [1]) and founded on the material found in the Lütken collection, may here be given.

[1]) Zeitschr. f. Kryst. Vol. 23, 1894, p. 346.

The crystals belong to the monoclinic system and have the following axial ratios:

$$a : b : c = 1{,}31639 : 1 : 0{,}8075; \quad \beta = 64° 42'.$$

By reflected light neptunite is of pure black colour. In thin microscopical sections and in thinnest splinters it is translucent with a blood-red colour. The plane of the optic axes is perpendicular to the second pinacoid; the first mean-line has an inclination of 18° to the vertical axis within the obtuse angle β. The mineral is optically positive. It is strongly pleochroic, and the absorption takes place according to the scheme

$$c > b > a.$$

The specific gravity of the mineral is 3,234; the hardness is 5—6. The mineral has an eminent cleavage parallel to the prism of the third order.

According to J. W. Clarke's interpretation [1]) of the results of the analysis the chemical composition is as follows:

$$Ti \begin{cases} SiO_3 - (Na, K) \\ SiO_3 \\ SiO_3 \end{cases} > (Fe, Mn)$$

The neptunite crystals from the Lützen collection that formed the material of the above description were mainly of one and the same character. The only variation in form consisted in the presence or absence of certain subordinate forms. Afterwards, however, G. Nordenskiöld discovered in the same collection neptunite crystals of a habit quite different from that of the crystals previously observed [2]). These crystals

[1]) Bull. U. S. Geol. Surv. No. 125, 1895, p. 97.
[2]) Geol. Fören. Förh. Vol. 16, 1894, p. 345.

had escaped my attention owing to their small number and diminutive dimensions

Thus there already existed in the Lütze collection neptunite crystals of two different types. Amougst the material collected by me at the locality another type has been found, so that at present three distinct types at least are known. Between these types there do not, as is otherwise often the case with differently developed crystals of the same mineral, exist any intermediate forms; on the contrary, the neptunite crystals form sharply defined groups, the representatives of which have been found at separate places and in different associations. A description of each type is given below.

Type I.

Here belong the neptunite crystals previously described by the author. They occurred in the Lütze collection in tolerably large numbers, and some of the single individuals were rather large. The largest individual that has been found, is a twin crystal measuring 5 cm in length and 4 cm in thickness. In general habit the crystals belonging here bear some resemblance to octahedrons (Fig. 6, Plate VI). They are bounded by the following forms:

$a = \{100\}$, $b = \{010\}$, $c = \{001\}$, $m = \{110\}$, $d = \{\bar{3}01\}$,
$e = \{\bar{2}01\}$, $s = \{111\}$, $v = \{221\}$, $u = \{\bar{5}12\}$, $o = \{\bar{1}11\}$.

Twin crystals occur, but are very rare; I have not seen more than three. They are formed with the third pinacoid as twinning plane and one individual revolved 180° with reference to the other.

It is most probable that the whole supply of neptunite in the Lütze collection had been found at one and the same place on Narsarsuk, namely at the locality No. 4. I could not, at least, find any trace of neptunite of this type at any other locality. The mineral occurred here only as isolated crystals

or on small specimens amongst the loose gravel. As the place is of but limited extent, it was soon completely searched. The loose material was removed, and digging in the firm ground was undertaken, but no more neptunite was found. The quantity collected by me was smaller than that in the Lütken collection and it was also poorer in quality. One is justified in assuming that the neptunite in this place originally occurred in a druse formation of limited extent, which has been laid bare through the weathering of the rock. For Mr. Lütken, the director of the colony, the Esquimaux had collected here anything of striking appearance. What I found afterwards, consisted of such pieces as the first collectors had not observed or had not thought worth the trouble of picking up.

The neptunite crystals of this type usually occur implanted on larger individuals of aegirine, microcline, or quartz, which minerals consequently are earlier than the neptunite. The quartz is always strongly corroded, and the decomposition process to which it has been subject has taken place before the neptunite had crystallized out. Small microcline crystals are later than the neptunite. The neptunite crystals are often grown together into groups occasionally reaching the size of a clenched fist. In the interspaces between the neptunite individuals several minerals occur, which are partly later than the neptunite, and partly formed simultaneously with it. Such minerals are elpidite, epididymite, parisite, polylithionite, calcite etc. Of these, elpidite and epididymite often are in part imbedded in the neptunite crystals, whereas the others always are implanted upon their surfaces.

Type II.

G. Nordenskiöld observed in the Lütken collection small neptunite crystals differing considerably in habit from those described by me. They were prismatically elongated parallel to the vertical axis and bounded by the following forms:

$a = \{100\}$, $b = \{010\}$, $m = \{110\}$, $e = \{\bar{2}01\}$,
$o = \{\bar{1}11\}$, $u = \{\bar{5}12\}$.

What chiefly characterizes these small neptunite crystals is their elongated prismatic form and the absence of the faces of the third pinacoid. The same characters also belong to the greater part of the neptunite material collected by me on Narsarsuk. This form of development of the neptunite will be described here as «type II».

The crystals of this type that I have found are not so small as those observed by Nordenskiöld. They occasionally attain a length of 2^{cm} and a thickness of more than $^1/_2{}^{cm}$. On these crystals the following forms have been observed:

$a = \{100\}$, $m = \{110\}$, $d = \{\bar{3}01\}$, $e = \{\bar{2}01\}$, $s = \{111\}$,
$v = \{221\}$, $p = \{\bar{3}11\}$, $q = \{\bar{7}12\}$.

Not infrequently these crystals are attached in a manner that has allowed of the development of crystallographic boundaries at both their ends. The majority of individuals, however, are attached by one end to their substratum. Specimens with crystals thus attached are rather difficult to transport, because the projecting pointed crystals are easily broken.

The predominating faces are those belonging to the vertical prism. They are well developed and bright. They often show a fine tesselated striation consisting of a vertical striation in combination with a striation parallel to the edge in which they meet the form v.

The faces of the first pinacoid are always coarsely striated in vertical direction. Such a surface often looks as if it were composed of a number of parallel columns which are not quite on the same level.

Among the terminal faces those of the pinacoid of the second order, d, are dominating. They are never quite bright, but generally show only a faint shimmer. On them occur numerous small depressions, the inside of which consists of

brilliant facets, which reflect simultaneously with the forms e and p. The faces belonging to the pinacoid of the second order, e, are always very small, of triangular form and very brilliant.

The faces belonging to the forms s and v are also very brilliant. In general they have a fine striation parallel to their common combination-edge.

The forms p and q are new for neptunite. The faces of the former lie with parallel combination-edges on both sides of d. Consequently it has the same length of the c-axis as d, and is, besides, determined by measurements given below. The form q belongs to the zones $[\bar{1}10, \bar{3}01]$ and $[110, \bar{3}11]$, by which its indices are fully determined. These new forms generally have small faces. Especially those belonging to q are usually very narrow. As, however, they are well developed and very brilliant, they generally give accurate measurements, as will be seen by the figures in the following table.

	Measured	Calculated
$p:p = (\bar{3}11):(\bar{3}\bar{1}1)$	$= 47° 4'$	$47° 4'$
$p:m = (\bar{3}11):(\bar{1}10)$	$= 36° 47'$	$36° 36'$
$p:m = (\bar{3}11):(\bar{1}\bar{1}0)$	$= 79° 3'$	$78° 55'$
$q:m = (\bar{7}12):(\bar{1}10)$	$= 45° 32'$	$45° 26'$
$q:m = (\bar{7}12):(\bar{1}\bar{1}0)$	$= 65° 35'$	$65° 13'$

Twinning is still rarer among the neptunite crystals of the second type than among those of type I. Among the rich material available, which has been subject to a thorough examination, only a single twin crystal has been found, and this was not found until the chief investigation had been finished. The two individuals which form the twin crystal measure only $3 - 4^{mm}$ in length in the direction of the c-axis and a little more than 1^{mm} in thickness. The twinning has taken place according to the same law as with type I, the base being the composition-face. The c-axes of the two individuals

make an angle of 51° 16′ with each other. The twin crystal is attached to a small specimen in such a way that the crystal cannot be detached without being injured. However, the size of the specimen itself is so small that it could be placed on the goniometer for the measurement of the angles. The values obtained are as follows:

	Measured	Calculated
$a : \underline{a}$	= 50° 47′	51° 16′
$m : \underline{m}$	= 32° 15′	32° 24′

Neptunite of type II has been found only at one place, namely the locality No. 2 on Narsarsuk. After a thin layer of loose gravel had been removed, the rock was found to be pegmatitic and traversed by numerous cracks. At first several large aegirine individuals were obtained by breaking into the ground; at the same time a drusy cavity was laid bare containing a fairly large quantity of neptunite. The mineral was, thus, found here in situ. Though this locality lies only a few steps distant from the locality No. 4, where the neptunite of type I had been found, not a trace of type II could be observed at the locality No. 4, nor of type I at No. 2. Here the mineral occurred almost exclusively in intimate association with aegirine. The neptunite crystals were either immediately implanted on the aegirine individuals or formed porous masses in the larger interspaces between them. As the last filling between the neptunite crystals as well as in all other cavities occurred a dark-brown earthy intensely soiling substance, which has been found to contain a large percentage of manganese. The occurrence of neptunite proved to be confined to a limited area. After this area had been worked for all that could be obtained there, the digging was continued in the neighbourhood to no small extent. During this work several other minerals of great interest were met with, but no more unite was found.

The minerals with which the neptunite of this type is associated are in general the same as those accompanying type I. Epididymite needles traverse the neptunite crystals and are, consequently, earlier than these. The elpidite is probably formed simultaneously with the neptunite, for these minerals mutually interpenetrate each other. Decidedly later are: parisite, fluorite, polylithionite, calcite and cordylite, this last mineral being particularly characteristic of this locality.

Type III.

The neptunite crystals of the third type are in general smaller in size than those of the two other types. The largest individuals that have been observed measure only 3—4 mm in length and 1—2 mm in thickness. They occupy in some measure an intermediate position between the crystals of the first and those of the second type, differing, however, in habit from both. They are somewhat more elongated in the direction of the vertical axis than those of type I, but have not the pointed termination that characterizes type II. All the forms observed on the foregoing types, with the exception of q, occur also on these crystals, and, besides them, several new ones. The most important combinations are shown by the Figs. 8—11, Plate VI. The forms are:

$a=\{100\}$, $b=\{010\}$, $c=\{001\}$, $m=\{110\}$, $d=\{\bar{3}01\}$,
$e=\{\bar{2}01\}$, $f=\{\bar{1}01\}$, $s=\{111\}$. $v=\{221\}$, $x=\{311\}$,
$r=\{\bar{2}21\}$, $o=\{\bar{1}11\}$, $i=\{\bar{1}12\}$, $p=\{\bar{3}11\}$, $u=\{\bar{5}12\}$.

The crystals are excellently developed with sharp edges and corners, smooth and very brilliant faces, so that very accurate measurements can be obtained. The most common combination is represented by Fig. 8, Plate VI. In the vertical zone occur the first and the second pinacoid. The forms s

and o are nearly equally developed, which is never the case with type I. On crystals of type I the form o is always very subordinate and is often totally absent. On crystals of type II this form has not been observed. The faces belonging to the forms d and p are here (on type III) always very indistinct, generally successively passing into one another by an undeterminable rounding. The form x is new for neptunite. Its faces are always very small, yet quite determinable both by measurement and by zones, $x = (311)$ is located in the zones $[110, 1\bar{1}1]$ and $[100, 111]$.

Another combination is represented by Fig. 9, Plate VI. It is identical with the foregoing excepting the forms b, p and x, which are absent, while two new forms are present, viz.

$$r = \{\bar{2}21\} \quad \text{and} \quad f = \{\bar{1}01\}.$$

The form f belongs to the zones $[001, 100]$ and $[\bar{1}11, \bar{1}\bar{1}1]$. Its faces are always very narrow. The form r belongs to the zones $[001, \bar{1}11]$ and $[100, 221]$; it has, besides, been determined by angular measurements. The faces of this form are often of the same size as those belonging to the form o.

Fig. 10, Plate VII represents a combination of the following forms:

$$a = \{100\}, \quad b = \{010\}, \quad m = \{110\}, \quad c = \{001\},$$
$$s = \{111\}, \quad v = \{221\}, \quad o = \{\bar{1}11\}, \quad i = \{\bar{1}12\},$$
$$e = \{\bar{2}01\}, \quad f = \{\bar{1}01\}, \quad u = \{\bar{5}12\}.$$

Here the form i is new. It is determined by its position in the zones $[001, \bar{1}11]$ and $[100, \bar{5}12]$. The faces are often tolerably broad and always brilliant.

At the same place where the specimens with the crystals just described were met with, I also found a small specimen with neptunite crystals showing the simple combination of faces represented by Fig. 11, Plate VI. These crystals might as well be referred to type I. They are bounded only by the forms

$$m = \{110\}, \quad c = \{001\}, \quad d = \{\bar{3}01\}.$$

The forms *m* and *c* are represented by even and brilliant faces. The faces of the form *d*, on the other hand, present the peculiarity of having only their marginal parts preserved and somewhat brilliant, while the central portion has been subject to a decomposition process, which has occasionally gone very far. The substance of the mineral has passed into a brown powder which fills the cavity that has been formed. Sometimes the decomposition has proceeded so far that only a thin shell of the crystal remains. All the faces except those belonging to the form *d* are still brilliant, but if such a crystal is only gently pressed between the fingers, it will easily break, and one finds that its interior consists only of the brown powder. Such powder, which is often found in the mineral druses on Narsarsuk, seems in other cases to be the result of the decomposition of other minerals, *e. g.* rhodochrosite. (See page 30).

Neptunite crystals of the third type have been found only at the locality No. 7. Only a few specimens were met with, and on them the mineral occurs very sparingly. The specimens occurred lying loose among the gravel, and the underlying syenite contained neither neptunite nor other minerals of the pegmatite. As is usually the case, the specimens consist principally of microcline and aegirine. The neptunite does not come into immediate contact with the latter mineral, but the crystals generally occur implanted on the microcline and are occasionally surrounded with flexible laminae of polylithionite. Epididymite occurs also here as an earlier formation than the neptunite, and parisite as a later one. There further occur here a kind of greenish grey columns, which evidently owe their origin to the alteration of some other mineral. They have a serpentinous appearance and seem to have formed from elpidite.

The locality No. 7 is the only place where neptunite occurs associated with narsarsukite, and this association is of a peculiar character. Where the two minerals come into contact with each

other, neither of them seems to be quite fresh. It looks, further, as if each of the two decomposing minerals contained parts of the other. On one specimen one sees the fracture of a narsarsukite table that stands on edge. Only the outer shell of it consists of unaltered mineral. The interior consists of an aggregate of microscopic individuals of other minerals. One of these forms colourless needles which resemble elpidite. They must, however, be another mineral, because they show a considerably stronger double refraction than elpidite does. In this aggregate there is a rather large crystal of neptunite which must be presumed to have formed simultaneously with the alteration of the narsarsukite. It looks as if the neptunite crystal during the formation-process had exercised pressure on the remaining covering of undecomposed narsarsukite, both sides of which are curved outwards. If, as it appears from this, the neptunite has been formed at the cost of the narsarsukite, then manganous and ferrous oxides and potash must have been derived from other sources.

27. Lorenzenite.

I have named this new mineral after my friend and fellow worker Johan Lorenzen, the Danish mineralogist, who has made numerous important investigations on the minerals of Greenland, and who was taken away by an untimely death while on his way to Greenland in order to study the mode of occurrence of its minerals.

Lorenzenite has been found only in the crystallized state. The crystals are needle-like in form and seldom reach more than 1^{mm} in length and $0{,}1^{mm}$ in thickness. The diminutive size of the crystals has made their examination a very difficult task; to procure pure material for the analysis has especially been attended with much labour.

The lorenzenite crystals belong to the rhombic system. From the angles

$$(120):(1\bar{2}0) = 100°\,47' \text{ and } (111):(110) = 55°\,13',$$

determined by fairly accurate measurements, are calculated the following axial ratios:

$$a:b:c = 0{,}6042:1:0{,}3592.$$

Referred to these axial ratios the forms present have the following symbols:

$$a = \{100\},\ b = \{010\},\ m = \{110\},\ n = \{120\},$$
$$x = \{1.12.0\},\ p = \{111\},\ o = \{231\}.$$

The first pinacoid is of rare occurrence, and its planes are extremely narrow. The second pinacoid occurs less rarely, and its faces are sometimes tolerably wide. They are often striated parallel to their longitudinal direction. The prism of the third order, m, occurs on the majority of the crystals, but its faces are generally narrow. The particularly dominating form on the lorenzenite crystals is the prism of the third order, n, which is always present, often with its faces so broad, that the other faces in the vertical zone, compared with them, are exceedingly small. The rather remarkable form x is of frequent occurrence, and its faces are generally rather broad. The form x and the second pinacoid seem, as it were, to replace one another, for on crystals on which the pinacoid occurs, the former is in most cases absent and vice versa. The faces in the vertical zone are often striated parallel to their zonal axis, so that in this zone accurate measurements can seldom be obtained. Exceptionally the crystals have even faces, those of the form n being always the most perfect. The termination of the crystals always consists of the bipyramid p, and on some crystals, also the bipyramidal form o. The faces belonging to the form p are

either drusy and quite dull or else less brilliant at least than the other faces of the crystals. Often they are also somewhat curved (convex). The faces belonging to the form *o* are subordinate in size to those of *p*, but always very brilliant. They lie in the zone between *p* and *n* and are often somewhat striated parallel to the axis of this zone. The crystals are occasionally developed at both ends. Not unfrequently two or more individuals are grown together in a position not quite parallel.

The lorenzenite crystals present two types of development somewhat different from each other.

Type I.

The lorenzenite crystals of this type are chiefly characterized by their being terminated by the form *p* alone, the faces of which on these crystals are always drusy and dull. A conspicuous peculiarity of these crystals is, further, their being black at the ends, while the rest of the crystal has the usual appearance of the mineral, which is rather light and transparent. The crystals look like small lucifer matches with dark ends. The dark colour is not, however, due to any superficial coating of foreign matter, as may be distinctly seen with the aid of the microscope. The terminal portions of the crystals are quite impregnated with the colouring matter, the true nature of which cannot, however, be stated. Lorenzenite crystals of type I are represented by Figs. 1 and 2, Plate VII.

Type II.

The crystals of the second type are somewhat larger in size than those of type I. They are terminated by the pyramids *p* and *o*, the latter of which belongs exclusively to this type (Fig. 3, Plate VII). They are somewhat flattened in the direction

of the second pinacoid; this is mostly depending on the comparatively great breadth of the faces belonging to the form x. The faces of the fundamental pyramid are dull, generally giving only shimmer reflexions, but they are never drusy. Nor is any part of the crystals of type II darker in colour than the mineral in general.

Below are given the angular values obtained by measurements, together with the corresponding calculated values.

	Observed	Calculated
$a : b = (100) : (010)$	$= 89° 53'$	$90°$
$n : n = (120) : (1\bar{2}0)$	$= *100° 47'$	—
$n : n = (120) : (\bar{1}20)$	$= 79° 12'$	$79° 13'$
$m : n = (110) : (120)$	$= 18° 52'$	$19° 15'$
$x : n = (1.12.0) : (120)$	$= 31° 33'$	$31° 45'$
$p : m = (111) : (110)$	$= *55° 13'$	—
$p : b = (111) : (010)$	$= 72° 32'$	$72° 55'$
$p : p = (111) : (1\bar{1}1)$	$= 34° 35'$	$34° 19'$
$p : p = (111) : (\bar{1}11)$	$= 58° 14'$	$58° 27'$
$p : n = (111) : (120)$	$= 57° 45'$	$57° 25'$
$o : n = (231) : (120)$	$= 32° 52'$	$32° 34'$
$o : o = (231) : (\bar{2}31)$	$= 78° 28'$	$78° 20'$
$o : o = (231) : (2\bar{3}1)$	$= 70° 31'$	$70° 40'$

In colour the two crystal types differ somewhat from each other. Type I is almost colourless. Only a faint tinge of brown is observable. That, however, the crystals of this type show a sort of dark impregnation on their unattached ends, has already been pointed out. The crystals of type II, on the other hand, are far less transparent. This is not exclusively due to the circumstance that these crystals are thicker than the former; the principal cause is the greater intensity of the brown colour. A tinge of violet is also perceptible in these crystals.

The mineral has a very high adamantine lustre. Under the orthoscope the lorenzenite prisms always show extinction parallel to their longitudinal direction, on whatever faces they may be placed. A section oriented parallel to the first pinacoid is nearly colourless. Only a faint brownish tinge is observable. The light vibrating parallel to the c-axis is transmitted without any perceptible absorption. The light vibrating parallel to the b-axis, on the other hand, is somewhat more absorbed. The axial colour is faintly brownish inclining to violet. A section oriented parallel to the second pinacoid is somewhat more deeply coloured than the foregoing. Also here the light that vibrates parallel to the c-axis is transmitted without any perceptible absorption. The light vibrating parallel to the a-axis is most strongly absorbed, and the axial colour is the same here as parallel to the b-axis, though somewhat more intense. The absorption of light referred to the crystallographical axes is thus

$$a > b > c.$$

In sections parallel to the second pinacoid the axial image about the first mean line appears under the conoscope. The plane of the optic axes is parallel to the first pinacoid. The direction of the greatest velocity of light (the index α) coincides with the c-axis, the medium velocity of light (the index β) coincides with the a-axis, and the least velocity (the index γ) with the b-axis. As the last-mentioned direction is at the same time the first mean line (the acute bisectrix), lorenzenite consequently is optically positive.

The single crystals are too small to furnish material for prisms for determining the indices of refraction. Nor is it possible to produce a section perpendicular to the second mean line for the usual measurement of the angle between the optic axes. The optical constants could not, therefore, be fully determined.

From a little crystal group consisting of several individuals grown together in parallel position I succeeded in producing a prism, one side of which is parallel to the first pinacoid, and the refracting edge to the *c*-axis. With the light falling at right angles to the said side I measured in this prism the refraction of the two rays vibrating in the plane of the optic axes. The indices calculated from the measurements are:

	Red	Yellow	Green
α =	1,7320	1,7431	1,7580
γ =	1,7785	1,7876	1,8025
$\gamma - \alpha$ =	0,0465	0,0445	0,0445

A prism for the determination of β could not be produced.

In a section perpendicular to the first mean line, and consequently parallel to the second pinacoid, the angle between the optic axes was measured in air. The result obtained for light of medium wave-length was

$$2E = 72°.$$

Lorenzenite scratches adularia with difficulty. Its hardness is thus a little above 6. The mineral has a distinct cleavage parallel to the faces of the form *n*. Whether there is any other cleavage in the zone of the vertical axis, cannot be decided. When the crystals are crushed, they separate into splinters whose longitudinal direction is parallel to the said zone.

Before the blowpipe lorenzenite fuses easily to a black globule. With salt of phosphorus a silica skeleton is obtained. The mineral is decomposed by hydrofluoric acid, but by no other acids.

By weighing in benzole the specific gravity has been found to be 3,42. This determination has been made by R. Mauzelius, who has also performed the analysis. In the analysis 0,5727 gr. of pure material was used. The values obtained are as follows:

		Molecular ratios	
SiO_2	34,26	0,567	2
TiO_2	35,15	0,439	1,89
ZrO_2	11,92	0,097	
Na_2O	17,12	0,276	0,99
K_2O	0,87	0,004	
H_2O	0,77		
	99,59		

If the slight amount of water is neglected, the formula consequently becomes

$$Na_2O \cdot 2(Ti, Zr)O_2 \cdot 2SiO_2 \quad \text{or}$$
$$Na_2(TiO)_2Si_2O_7.$$

The mineral thus consists of a molecule of sodium metasilicate Na_2SiO_3, and a molecule of orthosilicate of the bivalent group TiO, with part of the titanium replaced by zirconium.

Structurally the formula of the mineral also may be written thus

$$\begin{matrix} Na-O \\ \quad O \\ Na-O \end{matrix} > Si < \begin{matrix} O \\ O \end{matrix} > TiO$$

Lorenzenite has only been found at the locality No. 9 on Narsarsuk. The mineral occurred there very sparingly as a secondary formation together with aegirine, microcline, albite, arfvedsonite, elpidite, rhodochrosite, epididymite, polylithionite etc. The aegirine was found in at least two different generations. The crystals of the earliest generation are generally very large and protrude into the drusy cavity from the compact mass of pegmatite. In the cavity they have been subject to an energetic decomposition process. They are traversed by numerous fissures, most of them parallel to the cleavages of the mineral, and along these fissures the decomposition has proceeded from the unattached ends of the crystals. Therefore,

the crystals are often terminated in a number of points; occasionally these end portions have an asbestos-like appearance. Also here and there on the longitudinal faces of the crystals considerable depressions have been formed by corrosion; these depressions are lined with needles and splinters like those occurring at the ends of the crystals. Between these fibres of aegirine and often oriented parallel to them occur lorenzenite crystals of type II. Elpidite crystals also occur in a like manner, and it is evident that the two minerals have formed simultaneously and during the decomposition process of the aegirine. On the new-formed minerals there occur small curved scales and basin-shaped crystal tables of polylithionite as the latest formation. Also on small fresh aegirine crystals one finds lorenzenite crystals in such a position that the two minerals have their vertical axes parallel, while the first pinacoid of the former mineral coincides with the second pinacoid of the latter.

The later generation of aegirine consists of small green translucent brilliant needles, the terminations of which are also brilliant. Associated with this aegirine occur most of the lorenzenite crystals of type I. The very brilliant needle-shaped crystals of this type generally occur implanted in irregular orientation on feldspar, where that mineral borders on primary aegirine. Small secondary crystals of microcline, albite, and epididymite are the usual companions of this type of lorenzenite. These minerals are generally surrounded by a dark, earthy substance, which is intensely soiling and probably owes its origin to the decomposition of rhodochrosite, of which remains are sometimes visible.

28. Leucosphenite.

The name of this new mineral is derived from the Greek words *λευκός*, white, and *σφήν*, a wedge, and chosen in allusion to the white colour of the mineral and the wedge-like form of the crystals.

The mineral has been found in but small quantity and only in the crystalline state. The crystals seldom attain more than 5^{mm} in length and $1—2^{mm}$ in breadth and thickness; the majority are considerably smaller in size. They belong to the monoclinic system and are fairly regularly developed, so that fairly accurate measurements could be obtained. The crystallographical constants are derived from the following angular values:

$$(130):(1\bar{3}0) = 120°\,15', \quad (130):(001) = 88°\,19', \text{ and}$$
$$(101):(001) = 53°\,21'.$$

The axial ratios calculated from them are

$$a:b:c = 0{,}5813:1:0{,}8501.$$
$$\beta = 93°\,23'.$$

According to these constants the forms present have the following symbols:

$$a = \{100\}, \quad b = \{010\}, \quad c = \{001\}, \quad x = \{011\}, \quad d = \{101\},$$
$$m = \{110\}, \quad n = \{130\}, \quad s = \{112\}, \quad p = \{\bar{1}11\},$$
$$g = \{133\}, \quad r = \{263\}.$$

Nearly all the crystals of this mineral that I have observed are very like one another with regard to their habit. Only as regards the presence or absence of certain subordinate forms do they present any variation. The forms that are always present and give the crystals their constant habit, are c, b and n. The crystals are always elongated in the direction of the a-axis into rectangular prisms, bounded in the longitudinal zone by the second and third pinacoids. The crystals are always terminated by the form n, the faces of which form the wedge-like ends that characterize the leucosphenite crystals (Fig. 4, Plate VII). The faces of the third pinacoid are generally predominant, so that the crystals are more or less tabular parallel to them. However there occur individuals on which the said pinacoids are almost equally developed (Fig. 9, Plate VII) or

which are tabular parallel to the second pinacoid. The combination-edges between the pinacoids in the longitudinal zone are sometimes truncated by the prism of the first order *x*, whose faces are always narrow (Figs. 5, 9, Plate VII). The prism (pinacoid) of the second order *d* occurs distinctly developed only on a small number of crystals (Figs. 5, 7, 8, 9, Plate VII). Its faces are almost always smooth and brilliant. Occasionally they are tolerably large. The prism of the third order *m* occurs, or is at least present as traces on every crystal of leucosphenite; its faces are, however, in most cases very small and indistinct (Figs. 4—6). Often they occur only as step-like formations on the edge between *n* and *d*. The prism of the fourth order *p* is a form of tolerably common occurrence, and its faces are occasionally rather large. In the majority of cases, however, they are small (Fig. 6) and uneven with no high lustre. The two forms *g* and *r* occur as extremely narrow truncations on the obtuse combination-edge between *n* and *c* (Figs. 6, 7). Often the two forms occur together. The faces are brilliant, but their edges are frequently irregularly rounded off.

The forms *a* and *s* have been observed only on a single crystal. This crystal, which measures a little more than 1^{mm} in length and $^1/_3{}^{mm}$ in thickness, is represented by Fig. 9. It was found associated with minerals quite different to those which generally accompany leucosphenite, and it also differs in habit from other crystals of this mineral. Like them it is prismatically elongated in the direction of the *a*-axis and bounded in the zone of this axis by the second and the third pinacoids, which are almost equally well developed. Their combination-edges are truncated by narrow faces belonging to the form *x*. The crystal is developed only at one end and is there colourless and perfectly clear. The other end, by which the crystal has been attached, is opaque. As on this crystal the prismatic form *n* is very subordinate, the wedge-like termination

that otherwise characterizes the mineral is not found on this individual. On the other hand, the form *m* has on this crystal attained a development to which nothing corresponding is found on the common leucosphenite crystals. The faces of the form *p* are large, smooth and of a magnificent lustre. The pinacoid of the second order *d* is represented by a very small, but brilliant and quite determinable face. The face *a* of the first pinacoid is large, smooth and brilliant. The largest of the terminal planes of this crystal, however, are those of the form *s*. They belong to the zones [001, 110] and [011, 101], which is sufficient for a certain determination of the form.

The leucosphenite crystals of the common type are generally developed on both ends. The faces of the third pinacoid are, as a rule, striated longitudinally, which striation is due to the alternation of faces belonging to the forms *c* and *x*. Sometimes the striation disappears, at least in places, and then the face is dull. Some crystals are striated on one side and dull on the other. When dull and striated spots occur on the same faces, they border irregularly on one another. The faces of the second pinacoid are also striated, but on them the striation runs in the vertical direction, consequently across their longitudinal direction. Here it is the form *n* which causes the striation by alternation. In most cases the striation is most marked at the ends of the faces; the middle portions of the faces generally have no striation. These faces are, besides, seldom quite plane, but either show a continuous rounding or an abrupt bending, owing to which their ends make a smaller angle with *n* than the unbroken plane would make. The difference I have found almost unvariably to be about 1° towards each end. Also on the faces of the form *n* occurs a vertical striation, which, however, does not essentially interfere with the measurement of the angles. The crystals are not in general very sharply developed, their edges and corners usually being somewhat rounded off. Only the crystal represented by Fig. 9,

Plate VII, forms an exception from this rule, being perfectly developed in every respect.

In the annexed table are given the measurements obtained for eight crystals, together with the corresponding calculated values.

Table of angles.

	1	2	3	4	5	6	7	8	Calculated
(001) : (010)	89° 47′	90° 28′	90° 16′	89° 50′	89° 58′	89° 57′	89° 58′	90° 6′	90°
(011) : (001)	. . . .	. . . .	40° 23′	. . . .	. . . .	. . . . .	39° 56′	40° 21′	40° 19′
(100) : (001)	. . . .	. . . .	. . . .	. . . .	. . . .	. . . . .	. . . .	86° 38½′	86° 37′
(101) : (001)	53° 44′	. . . .	. . . .	53° 22′	*53° 21′	. . . . .	53° 20′	53° 27′	*53° 21′
(130) : (1$\bar{3}$0)	*120° 15′	. . . .	. . . .	120° 22′	120° 11′	120° 18′	. . . .	. . . .	*120° 15′
(110) : (1$\bar{1}$0)	60° 37′	. . . .	. . . .	. . . .	. . . .	60° 51′	. . . .	59° 55′	60° 16′
(110) : (130)	29° 54′	29° 58′	. . . .	30° 11′	30° 20′	29° 51′	29° 57′	. . . .	29° 23′
(130) : (001)	*88° 19′	88° 14′	88° 16′	88° 25′	88° 21′	88° 15′	88° 18	. . . .	*88° 19′
(133) : (001)	. . . .	. . . .	. . . .	43° 25′	. . . .	42° 21′	. . . .	. . . .	43° 33′
(263) : (001)	61° 17′	. . . .	. . . .	. . . .	. . . .	62° 6′	. . . .	. . . .	61° 36′
(1$\bar{1}$1) : (001)	. . . .	. . . .	. . . .	. . . .	61° 36′	. . . . .	. . . .	61° 38′	61° 35′
(221) : (001)	. . . .	. . . .	. . . .	. . . .	38° 47′	. . . . .	. . . .	38° 56′	38° 39′

Twinning is tolerably common in leucosphenite. The law according to which the twins are formed is as follows: the twinning plane is the third pinacoid c {001}; the twinning axis is a normal to this; one of the individuals is revolved 180° about the twinning axis. As the salient and re-entering angles between the faces of the form n on the sub-individuals deviate very little from 180°, these twins are not easily distinguished from simple crystals (Fig. 8, Plate VII). The vertical axes of the two subindividuals make with each other an angle $= 2(\beta - 90°) = 7° 16'$. On one of the twins (cryst. No. 4) the following determinations of angles have been made.

	Measured	Calculated
$d : \underline{d}$ =	73° 20′	73° 22′
$n : \underline{n}$ =	3° 24′	3° 30′

In colour leucosphenite is white inclining to greyish blue. This shade does not, however, occur on crystal No. 8. Pure crystals that have no cracks are often quite clear. Often, however, the leucosphenite crystals are traversed by cracks, or they contain inclusions of extraneous matter; in such cases they are somewhat opaque. The crystalline planes as well as the fracture show a marked vitreous lustre. Certain faces, as those of the forms b and n, often exhibit a pearly lustre.

In accordance with the monoclinic nature of the mineral sections oriented parallel to the first and the third pinacoids show extinction parallel to the second pinacoid. But also a section cut parallel to the last-mentioned pinacoid shows extinction parallel to the direction of the a-axis. At all events the deviation, if such there be, is so small that it has not been possible to ascertain it. On the other hand, one of the extinction-directions makes, of course, with the vertical axis an angle $= \beta - 90° = 3° 21'$ in the plane of symmetry. This direction lies in the obtuse angle β.

The vibration-direction falling in the obtuse angle β is the optic normal, for the optic axial plane lies almost parallel to the third pinacoid. The first mean line (the acute bisectrix) coincides with the crystallographic a-axis; and as this is at the same time the direction of the greatest velocity of light, the mineral is optically negative.

For the determination of the optic constants a natural and a prepared prism were used. The former was bounded by the two faces (130) and ($1\bar{3}0$) and bisected by the plane of the greatest and mean velocity of light. The refracting edge of this prism coincides with the crystallographic c-axis, but not exactly with the direction of the mean velocity of light of the substance. The deviation, which is $3° 23'$, as above stated, gives rise to an error in the determination. It cannot, however, exercise any influence of importance on the result. The unavoidable errors in using prepared prisms will probably in most cases be no less. In the above-mentioned natural prism the indices of refraction α and β were determined by determining the minimum deviation. The other prism is bounded on one side by the third pinacoid and on the other by a cut and polished face which makes an angle of $31° 42'$ with the said pinacoid. The refracting edge is parallel to the b-axis. In this prism the index γ, and again α, were determined by light falling perpendicularly to the first-mentioned face. The following values were obtained.

	α	β	γ	$\alpha - \gamma$
Red	1,6401	1,6572	1,6829	0,0428
Yellow . . .	1,6445	1,6609	1,6878	0,0433
Green	1,6475	1,6638	1,6923	0,0448

From these values the following axial angles are calculated

	Red	Yellow	Green
$2Va$ =	$79° 26'$	$77° 4'$	$75° 18'$

The dispersion is thus rather considerable and takes place according to the formula

$$\rho > v.$$

The specific gravity of leucosphenite has been determined by weighing in benzole and found to be 3,05 (Mauzelius). Its hardness is 6,5. The mineral has a distinct cleavage parallel to the second pinacoid $b\ \{010\}$. The mineral is often easily cleaved in this direction; but in sections cut perpendicular to the cleavage, this is seldom quite distinct. A cleavage parallel to the form n could not be detected, though the mineral often shows a pearly lustre on the faces of this form.

As the material available was very scanty, no more than 0,5238 gr. of pure substance could be procured for the analysis. The analysis has been made by R. Mauzelius; and the values obtained are as follows.

		Molecular ratios	
SiO_2	56,94	0,943	10
TiO_2	13,20	0,165	2,06
ZrO_2	3,50	0,025	
BaO	13,75	0,090	0,95
Na_2O	11,14	0,180	1,97
K_2O	0,56	0,006	
H_2O	0,31		
	99,40		

To obtain an acceptable proportion between the acid and the basic constituents, TiO_2 and ZrO_2 must be made basic. The formula then becomes

$$BaO \cdot 2\,Na_2O \cdot 2\,Ti(Zr)\,O_2 \cdot 10\,SiO_2 \text{ or}$$
$$BaNa_4(TiO)_2(Si_2O_5)_5.$$

Leucosphenite would thus be a dimetasilicate, and the only known substance of analogous composition would be petalite. The leucosphenite crystals do, indeed, remind one in some

measure of the crystallized petalite from Elba. I have not, however, succeeded in finding any analogy between the crystallographical constants of the two minerals. On the other hand there exists a partial agreement between the axial relations of leucosphenite and eudidymite. This appears distinctly if the a-axis of the former mineral be multiplied by three; one then obtains

for leucosphenite: $a:b:c = 1{,}7439 : 1 : 0{,}8501$; $\beta = 93° 23'$
- eudidymite: $a:b:c = 1{,}71075 : 1 : 1{,}10712$; $\beta = 93° 45\frac{1}{2}'$.

The angle β of the two minerals agrees very closely, and so is also the case with the a-axes. The angles in the vertical zone are for both very near 60°, *i. e.* they are both in a sense pseudo-hexagonal. With both minerals twinning occurs with the third pinacoid as composition-face. If the chemical formula of eudidymite is written

$$BeSiO_3 \cdot HNaSiO_2O_5,$$

then this mineral may be regarded as partially derived from the same silicic acid,

$$H_2Si_2O_5,$$

which must be assumed to enter into the composition of leucosphenite. The two minerals cannot, it is true, be said to be isomorphous in the proper sense of the word, but it is an indisputable fact that there exists a remarkable analogy between them crystallographically as well as chemically.

Before the blowpipe leucosphenite decrepitates and in the forceps fuses with some difficulty to a dark globule. In the salt of phosphorus bead a skeleton of silica is obtained; on cooling the bead becomes opalescent. The mineral is decomposed by hydrofluoric acid, but not acted upon by other acids.

The common leucosphenite has been met with only at the locality No. 2. On digging in this place a rather considerable

quantity of elpidite needles loosely agglomerated were found at some depth below the surface. They had been protected from the atmosphere and were snow-white and tolerably fresh. The mass was so loose that it could often be broken into pieces with the hands. On pressure it yielded and fell asunder into gravel with a crackling sound. The whole was traversed by larger aegirine crystals, which thus formed a sort of skeleton in the fragile aggregate. In the numerous spaces between the elpidite needles several other minerals occurred in crystals. There were small well-developed crystals of epididymite, albite, polylithionite, leucosphenite, etc. The last mineral was found only in small quantity. Like the other minerals mentioned here, it is of later formation than the elpidite. Elpidite needles sometimes traverse the leucosphenite crystals, which, however, have been formed earlier than the albite. The crystal No. 8, which is of a type differing from the others, was found on a specimen from the locality No. 1.

29. Elpidite.

By the name elpidite G. Lindström[1]) designated a previously unknown mineral which he had observed in the Lütze collection. In his article he chiefly gives an account of the way in which he analyzed the mineral and the result of his analysis. To the latter we shall return later on. Lindström further gives a statement of the physical properties of the mineral as observed by him. He describes it as finely columnar, forming long sheaves. Occasionally the columns are short and confusedly intergrown. Sometimes they are matted together into a half-compact, felt-like, brick-red mass. The mineral occurs on aegirine crystals and sometimes fills up the drusy cavities in which the latter occur. It is, further, accompanied

[1]) Geol. Fören. Förhandl. Vol. 16, 1894, p. 330.

by feldspar, calcite, etc. Less frequently it is found associated with neptunite and epididymite. In colour it is sometimes white or yellowish-white, sometimes a light brick-red. When brick-red the mineral is not quite pure. The hardness is somewhat varying; the red mineral has the hardness of quartz or a little more; the white mineral is scratched by quartz. The specific gravity of the former is 2,594, that of the latter 2,524. Before the blowpipe the mineral easily fuses; in the closed tube it yields abundance of water. In the borax bead it is dissolved with difficulty into a clear glass; the salt of phosphorus bead, on the other hand, remains opaque. It is decomposed by hydrofluoric acid, but not acted upon by other acids. All the above characters are quoted from Lindström.

Apart from the rock-forming minerals feldspar and aegirine, no mineral probably occurs so abundantly on Narsarsuk as elpidite. Detached pieces of it lie scattered all over the plateau, and at most of the localities worked by me it was met with in situ in larger or smaller quantities. It varies considerably both in form, structure and colour. As a rule it may be said to present rather an unattractive appearance. It has a columnar structure, and is mostly of a greyish colour. Thus at first sight it looks like wooden slips or sticks in a state of decay.

The separate columns of elpidite vary in size from the thinness of a hair to the thickness of a finger or more. In the longitudinal zone they are chiefly bounded by faces which make with each other about the same angles as occur on amphibole, viz. 124° and 56°. Crystalline terminations are extremely rare and occur only on very small, clear and colourless or enamel-white individuals. The common individuals are either terminated by irregular fractures or rounded as if they had been acted upon by some solvent. Occasionally the larger individuals are split up at the ends into a number of pointed fibres. Individuals of some length are seldom quite straight, but mostly bent like a

bow. Not infrequently one meets with individuals that are broken right off without the parts being severed. Individuals also occur which are partly split lengthwise, one of the parts being bent out from the other like a branch.

The mode of aggregation of the elpidite individuals seems to be quite irregular. The thicker columns cross one another in various positions; from them thinner needles shoot out in different directions, more or less completely filling the interspaces. Such sponge-like masses of elpidite often serve as a substratum for crystals of other minerals which have been formed later, as calcite, polylithionite, leucosphenite, epididymite, albite, etc. In some cases the interspaces are quite filled up with calcite or some other substance. The elpidite itself also forms quite compact and hard masses consisting of extremely fine fibres felted together and generally of a reddish colour. They therefore present a striking resemblance to the so-called «spreustein» from Langesund in Norway.

Elpidite has been crystallographically investigated by G. Nordenskiöld[1]). He found the common elpidite columns wholly unfit for angular measurements, owing to the absence of regular terminations and the dullness of the faces in the longitudinal zone, which gave no reflections. Only after a long search he succeeded in finding some well-developed crystals, the length and thickness of which he states to be 0,1—0,2 mm and 0,03—0,05 mm respectively. On these crystals, which belong to the rhombic system, he could determine the following fundamental angles.

$$(011) : (001) = 44° 22' \quad \text{and} \quad (110) : (1\bar{1}0) = 54° 12'.$$

From these measurements were calculated the following axial ratios:

$$a : b : c = 0{,}5117 : 1 : 0{,}9781.$$

---

[1]) Geol. Fören. Förh. Vol. 16, 1894, p. 343.

Referred to this axial ratio the observed forms have the following symbols:

$$a = \{100\},\ b = \{010\},\ c = \{001\},\ m = \{110\},$$
$$n = \{120\},\ d = \{011\},\ e = \{031\}.$$

Besides these he states the presence of three less certainly determined forms in the vertical zone.

Among the elpidite material collected by me microscopical crystals like the above-mentioned are by no means rare. They sometimes occur as a hair-like coating on such elpidite individuals of larger size as have not been subject to atmospherical action. On individuals that have been for a long time exposed to the open air they are not found. Occasionally elpidite crystals of this kind are met with that are rather larger in size than those examined by Nordenskiöld. I have observed individuals measuring a millimeter or two in length and $^1/_3{}^{mm}$ in thickness. In the longitudinal zone they are always deeply striated and hardly determinable.

The largest and most distinctly developed elpidite crystals were found by me at the locality No. 9. At that place large columns, as thick as a man's finger, of common, grey, opaque elpidite occurred in abundance. Some of these individuals had a coating of smaller, well-developed crystals of the same mineral. These crystals are up to 5^{mm} in length and 1^{mm} in thickness. They are implanted close to one another in parallel orientation with reference to the larger individual. Some of them are clear and transparent and quite unaltered, but the majority are of an enamel-like opacity. The latter have bright surfaces, but are nevertheless altered throughout. If one tries to detach them, they generally fall into small fragments.

On some of the clear crystals I have made angular measurements, and the results that I have obtained may certainly claim a high degree of accuracy. From them it appears that the values obtained by Nordenskiöld are very good considering

the extraordinarily small dimensions of the crystals on which he made his observations. This is especially true with regard to the value from which the *c*-axis has been calculated. As for the *a*-axis Nordenskiöld himself remarks that, owing to the irregular development of the prismatic zone, it has not been possible to obtain quite accurate values for its angles.

For the calculation of the axial ratios I have made use of the following angles:

$$(110) : (1\bar{1}0) = 45° 3' \quad \text{and} \quad (031) : (0\bar{3}1) = 88° 45'.$$

The axial ratios calculated from them are

$$a : b : c = 0{,}51008 : 1 : 0.97813.$$

The following forms have been observed:

$$a = \{100\}, \quad b = \{010\}, \quad c = \{001\}, \quad m = \{110\},$$
$$n = \{120\}, \quad d = \{011\}, \quad e = \{013\}, \quad g = \{102\}.$$

All the forms given by Nordenskiöld as certain have been found again by me, with the exception of *e*. Only one new form have I been able to ascertain, viz. *g*.

The common elpidite individuals which are not terminated by crystalline faces are generally bounded in the longitudinal zone by the forms *m* and *n*. The faces belonging to the form *n* are in general predominant. As the angles which these faces make with one another are about the same as those of amphibole, the elpidite individuals mostly look like common actinolite columns. On some individuals also the first pinacoid *a* has been observed, and then the form *n* is present as an extremely narrow bevelment on the sharp edges of the crystals.

On perfectly developed crystals also the second pinacoid *b* is present in the vertical zone (Fig. 2, Plate VIII). This form is much more common on the crystals than *a*. The faces belonging to the form *n* are often larger than those of the form *m* (Figs. 3, 4, Plate VIII). The faces in the vertical zone are

generally strongly striated parallel to the axis of the zone; it is therefore only in rare cases that accurate values of the angles in this zone can be obtained. The crystals are generally terminated by d and c. The faces belonging to the form d are, as a rule predominant. Sometimes c is totally absent (Fig. 1). The new form g has been found only on a few comparatively large crystals (Fig. 4). Its faces are large and, like the other terminal faces of these crystals, eminently smooth and brilliant.

Below are given the most important of the angular values found by measurement of the elpidite crystals together with the corresponding calculated values.

	Observed	Calculated
$a : b = (100) : (010)$	$= 89° 56'$	$90°$
$m : m = (110) : (1\bar{1}0)$	$= *54° 3'$	—
$m : b = (110) : (010)$	$= 62° 39'$	$62° 58'$
$m : a = (110) : (100)$	$= 26° 58'$	$27° 2'$
$n : n = (120) : (1\bar{2}0)$	$= 88° 45'$	$88° 52'$
$n : m = (120) : (110)$	$= 18° 28'$	$18° 32'$
$d : d = (011) : (0\bar{1}1)$	$= *88° 45'$	—
$d : c = (011) : (001)$	$= 44° 20'$	$44° 22'$
$g : c = (102) : (001)$	$= 43° 48'$	$43° 48'$
$g : a = (102) : (100)$	$= 46° 8'$	$46° 12'$
$d : n = (011) : (120)$	$= 59° 49'$	$60° 1'$
$g : d = (102) : (011)$	$= 59° 3'$	$58° 57'$
$g : n = (102) : (1\bar{2}0)$	$= 60° 40'$	$61° 2'$

With regard to diaphaneity elpidite is, as has already been stated, of three kinds: opaque columns, enamel-white crystals, and clear and transparent crystals. The last or the well-developed crystals occur so sparingly and are so small that one cannot from them obtain material for an optical

investigation of the mineral. It is consequently only the common columnar forms that are available for this purpose. These are, however, in most cases too opaque. The opacity is chiefly owing to the fact that the mineral is split into hair-like fibres, so that sections oriented parallel to the longitudinal axis present quite an asbestus-like appearance. Only such columns whose colour shows a tinge of yellow are tolerably free from cracks and translucent. Very thin sections of such individuals are perfectly transparent.

Sections oriented parallel to the two vertical pinacoids show in polarized light extinction parallel to the c-axis, and in the same direction they also show, as Nordenskiöld states, the greatest velocity of light. In a section parallel to the first pinacoid (100) one observes under the conoscope an axial image whose axes, however, are not visible in the field of the microscope. The axial plane is parallel to the second pinacoid (010). Owing to the thinness of the section only the trace of a lemniscate is observable in the centre of the field of vision. It has not been possible to produce a translucent section parallel to the third pinacoid; I have not, therefore, been able to measure the angle of the optic axes.

From the aforesaid yellowish columns prisms were prepared for the measurement of the refractive indices of the mineral. One of the prisms is bounded by a face cut parallel to the first pinacoid, and its refracting edge is parallel to the b-axis. In this prism by light falling perpendicularly against the aforesaid face the indices α, parallel to the c-axis, and β, parallel to the b-axis, were determined. The other prism is bounded by a cut face parallel to the second pinacoid, and its refracting edge is parallel to the a-axis. In this prism the index γ, parallel to the a-axis, was determined and, besides, α once more. The prisms are not, it is true, translucent except on the extreme thin edge; however, I succeeded in making the determinations with tolerable accuracy.

The values obtained are:

	α	β	γ	$\gamma-\alpha$
Red	1,5575	1,5620	1,5700	0,0125
Yellow	1,5600	1,5650	1,5739	0,0139
Green	1,5632	1,5674	1,5766	0,0134

From these the following axial angles are calculated:

	Red	Yellow	Green
$2V =$	74° 2′	75° 12′	77°

As the acute angle of the optic axes is bisected by the direction of the least velocity of light, the mineral is optically positive.

The dispersion takes place according to the formula

$$\rho < v.$$

The analysis which Lindström performed on elpidite gave the following results.

SiO_2	59,44
ZrO_2	20,48
FeO	0,14
CaO	0,17
Na_2O	10,41
K_2O	0,13
H_2O	9,61
Cl	0,15
	100,53

From this is calculated the formula

$$Na_2O \cdot ZrO_2 \cdot 3H_2O \cdot 6SiO_2.$$

What causes some difficulty in this case is the considerable percentage of water. The fact is that on microscopical examination the mineral is seldom found to be fresh. Apart from the rarely occurring small and clear crystals, it is

only the light yellowish columns that prove to be in a tolerably unaltered condition. But that sort of material has evidently not been at Lindström's disposal. He states his material to have been of a faint silky lustre; now this is characteristic of the common asbestus-like form, which always is more or less altered. The nature of this alteration is not, of course, known with certainty. That it is combined with hydration, is, however very probable. The amount of water found, except $^1/_2$ per cent, goes off before ignition, and 5,89 % is lost at a temperature between 15° and 100° C.

It can, therefore, hardly be doubted that at least part of the water percentage is secondary. If the whole of the water is considered as secondary, the original mineral should have the following composition:

$$Na_2 Si_2 O_5 + Zr(Si_2 O_5)_2.$$

This composition would be quite analogous to that of the minerals narsarsukite and leucosphenite, which are however known only in the fresh state.

30. Narsarsukite.

The new mineral which is to be described in the following lines was the first that attracted my attention on Narsarsuk. None of the other new minerals has been found at so many different localities on the plateau or is so largely distributed there. It may therefore, more than any other mineral, be said to be characteristic of the place. On this ground I propose for it the name narsarsukite [1]).

---

[1]) Persons familiar with the Greenlandian or Esquimaux language have told me that the name of the plateau, which name is said to signify »the great plain», should be written Narsarsuk. Of this I was not, however, informed, untill the plates belonging to the present article, had been printed. Therefore the name of the mineral is given in Plate VIII in the form narsasukite in accordance with the pronunciation of the

The mineral occurs only as crystals; on account of its eminent cleavage, however, the crystals are highly subject to being broken or split. One, therefore, seldom meets with whole crystals, but mostly only fragments. These fragments, however, present, on the whole, the same forms as the unbroken crystals and are bounded by the same faces.

The crystals belong to the tetragonal system and, probably, to the bipyramidal class of this system. From the angle

$$(111) : (110) = 53° 29'$$

is calculated the axial ratio

$$a : c = 1 : 0{,}52352.$$

The crystals are bounded by the following forms:

$$c = \{001\},\ a = \{100\},\ m = \{110\},\ n = \{210\},\ p = \{111\}.$$

The base is generally the predominant form. Therefore the crystals are almost always tabular parallel to this form. Only on very small crystals do the prismatic faces sometimes attain the same size as the basal faces. The crystals are then of a cubic form; occasionally they may even be of short prismatic habit parallel to the c-axis. Among the faces in the vertical zone the prism of the first order m is in the majority of cases the predominant form. The prism of the second order a then appears as a truncation of the vertical edges. The tetragonal prism of the third order n is rather rare, it is always represented by narrow planes, sometimes it occurs only as a striation in combination with the other vertical faces (Fig. 5, Plate VIII). This tetragonal prism has never been observed represented by the full number of faces, but always, even when several of its faces occur on the same crystal, only on one

---

Greenlanders who accompanied me during my excursion in 1897, the only pronunciation that I ever heard. This is also the reason why the form Narsasuk is used in the account of my journey in this Journal, Vol. 14 p. 251.

side. This indicates pyramidal hemihedrism. I have tried to produce etching figures in order to establish this fact. But my attempts have been unsuccessful. The only acid that acts upon the mineral is hydrofluoric acid. But it only makes the faces dull. Neither macroscopically nor under the microscope have I been able to observe any distinct etching figures.

On a few crystals from one locality the prism of the second order *a* is alone present in the vertical zone (Fig. 6, Plate VIII). The only pyramidal form that has been observed on these crystals is the fundamental pyramid *p*. It does not occur on many crystals, and its faces are always very narrow (Fig. 7, Plate VIII). On the crystals which have only the prism of the second order in the vertical zone the fundamental pyramid is present as small triangular truncations of the corners (Fig. 6, Plate VIII).

As regards the physical properties of the faces the following facts may be stated. The basal planes are always somewhat uneven and seldom bright. The unevenness is due to small rounded elevations, which mostly seem to be irregular, but occasionally, especially on small cube shaped crystals, assume the form of very obtuse pyramids, which seem to be arranged parallel to the main pyramid. All the vertical faces are highly brilliant, but generally also strongly striated in vertical direction. The faces of the fundamental pyramid are smooth and brilliant. From the above it will be understood that the crystals are not suited for accurate reflection measurements. The base rarely gives good or fair reflections. The vertical faces give, owing to the striation, only approximate angular values with one another. On the other hand the angle between the pyramidal and prismatic faces can be determined with desirable accuracy, and the axial ratio calculated from it may therefore, be regarded as quite exact.

A few other values of angles are, however, also given here.

	Measured	Calculated
$m : m' = (110) : (1\bar{1}0)$	$= 90° \ 4'$	$90°$
$m : a = (110) : (100)$	$= 44° \ 53'$	$45°$
$a : a' = (100) : (\bar{1}00)$	$= 89° \ 52'$	$90°$
$n : a = (210) : (100)$	$= 17° \ 58'$	$18° \ 17'$
$c : a = (001) : (100)$	$= 90° \ 3'$	$90°$
$p : c = (111) : (001)$	$= 36° \ 24'$	$36° \ 51'$
$p : a = (111) : (100)$	$= 65° \ 2'$	$65° \ 7'$

Twin crystals do not seem to occur.

The specific gravity of narsarsukite was determined by the direct weighing of a pure crystal hanging by a hair first in air, then in distilled water. It was found to be 2,751 at a temperature of 20° C. The hardness of the mineral is a little above 7. One can produce faint scratches on quartz with the mineral; on the other hand it is more easily scratched by topaz. The mineral has a most eminent cleavage parallel to the fundamental prism *m*. In the direction of this cleavage the crystal tables very readily cleave into cube shaped fragments. Owing to this cleavage it is impossible to produce coherent thin sections perpendicular to the principal axis. Even in sections parallel to the same axis the cleavages are easily observable. Fracture, which, unless special measures are taken, is always obtained in a direction parallel to the *c*-axis, is columnar with vitreous lustre. The prismatic faces often have a pearly lustre.

In colour narsarsukite is honey-yellow with a tinge of reddish brown in the clearest portions. On incipient weathering the colour passes into ochre-yellow. Other crystals, which are in part altered, are brownish grey. In sections parallel to the principal axis the mineral is colourless. In an ordinary thin section no pleochroism is observable. In thicker sections, on the other hand, it is fairly distinct. The absorption is greatest parallel to the *c*-axis, and the axial colour is reddish yellow.

This colour is not, however, evenly distributed, but appears as spots, between which there are uncoloured portions. When the light vibrates perpendicularly to the c-axis, the section is colourless. Sections parallel to the base show a regular, uniaxial interference figure. The double refraction is positive. The indices of refraction were determined by means of a prepared prism with a refracting edge (parallel to the c-axis) of 44° 7′ and were found as follows:

	Li	*Na*	*Tl*
ω =	1,5492	1,5532	1,5576
ε =	1,5801	1,5842	1,5861

Narsarsukite has been analyzed by Mr. Chr. Christensen in Copenhagen. As there was a rich supply of pure and fresh material for the analysis, the correctness of the different determinations could be established by repeated trials. The result of the analysis is as follows:

		Molecular ratios	
SiO_2	61,63	1,0271	24
TiO_2	14,00	0,1707	4
Fe_2O_3	6,30	0,0394	1
Al_2O_3	0,28	0,0027	
MnO	0,47	0,0067	6
MgO	0,24	0,0060	
Na_2O	16,12	0,2600	
F_2	0,71	0,0187	1
H_2O	0,29	0,0161	
	100,04		
$-O = F_2$	0,30		
	99,74		

If the sesquioxides are taken together with the fluorine and H_2O as a bivalent group FeF, and if this group is sub-

stituted for one molecule of Na_2, and if, further, the silicic acid and the titanic acid are brought together, the following formula is obtained

$$Si_7 O_{15} Na_2,$$

to which there is nothing analogous in the mineral kingdom. Neptunite has previously been regarded as the most acidic of all silicates. But narsarsukite is still more acidic. However, this formula may, in accordance with Clarke's view, very well be written thus:

$$Ti_2 Si_{12} O_{22} Na_6 FeF =$$
$$\begin{matrix} & \diagup & (Si_2 O_5 Na)_2 \\ Ti & - & Si O_3 Na \\ & \diagdown & Si O_3 \end{matrix} > FeF$$
$$\begin{matrix} & \diagup & Si O_3 \\ Ti & - & Si O_3 Na \\ & \diagdown & (Si_2 O_5 Na)_2 \end{matrix}$$

If the slight amount of alumina is calculated as ferric oxide, the manganous oxide and the magnesia as soda, and the water as fluorine, and the whole calculated to 100, the relation between the values calculated from the above formula and those found is as follows.

	Calculated	Found
SiO_2	62,36	61,61
TiO_2	13,79	14,00
Fe_2O_3	6,88	6,74
Na_2O	16,03	16,89
F	1,63	1,32
	100,69	100,56
$-O = F_2$	0,59	0,56
	100	100

Before the blowpipe narsarsukite behaves as follows. In the forceps it fuses readily enough to a somewhat blebby glass,

which has the same yellow colour as the unfused mineral. With salt of phosphorus a skeleton of silica is obtained, and the bead is coloured by titanium. The mineral is not acted upon by other acids than hydrofluoric acid.

Narsarsukite has been found at the localities Nos. 1, 6, 7, and 13 on Narsarsuk, consequently only in the southern part of the mineral-bearing area. The largest quantity was collected at the locality No. 1. It occurred here together with quartz, microcline, albite, aegirine, graphite, elpidite, epididymite, and the new mineral tainiolite. Narsarsukite is one of the earliest-formed minerals at the place. Only aegirine seems to be older, since needles of this mineral sometimes are found traversing the narsarsukite tables. On the other hand, fully developed narsarsukite crystals intrude into the individuals of feldspar as well as into those of quartz. The other accompanying minerals are still later formations than the last-mentioned. However, the small cube shaped narsarsukite crystals are probably of later formation, since they occur loosely implanted in open spaces between the other minerals. The locality No. 6 did not differ in any respect from No. 1 excepting that the mineral was met with here in a far smaller quantity. At the locality No. 13 narsarsukite occurred as large, well-developed crystalline tables firmly implanted in feldspar and quartz. They were not, however, quite fresh, but earthy on the surfaces and brown in colour. At the locality No. 7 only a few loose specimens were found, on which narsarsukite occurred associated with neptunite of type III; it is, of course, older than that mineral.

31. Chalcolamprite.

As far as hitherto known, pyrochlore is a mineral which occurs exclusively in syenite rocks. Thus the mineral was first discovered in the syenite of southwestern Norway, where it is met with in several places. In the Ilmen mountains near Miass

in the southern Urals pyrochlore has been found in syenite and likewise in the neighbourhood of Pike's Peak in Colorado. Of late years P. Holmqvist has discovered and described pyrochlore from the elaeolite-syenite in Alnö near Sundsvall [1]). Closely allied to pyrochlore are the minerals microlite and perofskite, of which the former has been found in granitic pegmatite and the latter in contact zones of limestones. In the sodalite-syenite district on the firths of Kangerdluarsuk and Tunugdliarfik in Greenland, which has been known for a long time, neither pyrochlore nor any other mineral related to it has hitherto been found.

G. Nordenskiöld discovered in the Lütken collection from Narsarsuk a mineral which, in spite of the extremely scanty supply of material, he subjected to an investigation with the result that he found it to be microlite [2]). This mineral I also found on Narsarsuk and shall describe it later on. Besides this I found two other minerals, which were at first supposed to be pyrochlore; but on closer investigation it has been found that, instead of pyrochlore, we have here two new minerals related to it. To one of these minerals I have given the name chalcolamprite.

The name chalcolamprite is derived from the Greek words *χαλκός*, copper, and *λαμπρός*, shine, lustre, and has been chosen in allusion to the fact that the faces of the crystals mostly display a copper-like lustre.

Chalcolamprite has only been met with in the crystallized state. The crystals are small; the largest individuals that have been observed measure only 5^{mm} in size. They belong to the cubic system, and the only form that has been observed on them is the octahedron. The crystals are fairly regularly developed with sharp corners and edges and tolerably brilliant

[1]) Geol. Fören. Förh. Vol. 15, 1893, p. 588.
[2]) Ibid. Vol. 16, 1894, p. 336.

faces. The latter are, however, hardly ever quite even, but almost constantly show a system of irregular elevations and depressions. These are, however, of such small dimensions that they can only be perceived with the aid of a magnifier. The elevations then generally appear as very low, rounded wart-like excrescences. Sometimes it looks as if the crystal had been split up into a number of small irregular fragments, which had been again cemented (or grown) together, not, however, quite in their original position, but so that some portions rise above the level of the others.

In fact the chalcolamprite crystals are very often traversed by open cracks, the separate parts being retained in their position either by aegirine needles traversing the crystal across the crack or by the attachment of the crystal. Sometimes the crystals are hollow, consisting only of a thin shell of mineral substance. One would be inclined to consider this hollowness as secondary and due to some decomposition process in the interior of the crystal. However, it is not probable that such a process has taken place, for the crystal shell seems to be quite as fresh and brilliant on the inside as on the outside. Most likely it is that we have here an original skeleton structure of the crystals. In the cavities there sometimes occur small groups of aegirine needles arranged radially and having the same lustre and characters as like needles outside the crystal shell.

The crystals mostly occur singly attached to their substratum. Not infrequently they are attached only by a corner or an edge and, consequently, developed all around. In other cases they are attached by an octahedral face, being flattened parallel to this face into thin triangular tables rising but little above the surface on which they rest. Occasionally several individuals are grown together, penetrating one another, always irregularly. Twinning has not been observed.

The mineral scratches apatite, but not feldspar. Its hard-

ness, consequently, is 5,5. No true cleavage has been ascertained. Occasionally an exfoliation is observable on the octahedral faces, but it is always quite superficial and probably of secondary origin. The fracture is splintery or subconchoidal.

The colour of chalcolamprite is a dark greyish brown distinctly inclining to red. The powder is ash-grey. The crystal faces exhibit a very characteristical metallic lustre with iridescence in copper-red and green (hence the name of the mineral). On the fracture the mineral shows a marked greasy lustre. It is opaque; only in thinnest splinters translucent.

A microscopical section thin enough to be translucent has a straw-yellow colour and is optically perfectly isotropic. It is traversed by fine irregular cracks; and the mineral contains a large number of microscopical inclusions, the nature of which could not be determined. A section oriented parallel to an octahedral face shows a feeble indication of zonal structure parallel to the triangular outline of the section. The zones consist of alternating lighter and darker substance.

By weighing in benzole the specific gravity of chalcolamprite was found to be 3,77 (Mauzelius).

As chalcolamprite, as well as the following mineral (endeiolite), had on a preparatory examination proved to be mainly niobates, which, together with their crystalline form and other properties indicated that the composition of the minerals ought to be about that of pyrochlore, the scanty amount of material of each mineral available for analysis was divided into two portions, one for the determination of fluorine and water and the other for the determination of the other constituents. The latter was decomposed by hydrofluoric and sulphuric acids. The two minerals were analyzed at the same time and by the same methods, and showed a great agreement in composition. In both analyses there was a loss of about 10 per cent. The method of analysis was such as made it necessary to infer that this loss could only be silicic acid. Fortunately, another portion

of chalcolamprite could be procured sufficiently large to allow of ascertaining that the mineral really contains silicic acid to the very amount required for covering the loss.

The analysis was performed by R. Mauzelius. For the determination of silicic acid 0,6268 grams of material were used, for determining the fluorine and water 0,4290 grams, and for the determination of the other constituents 0,5138 grams. The result obtained is as follows.

		Molecular ratios		
Nb_2O_5	59,65	0,223		1,12
SiO_2	10,86	0,180	0,186	0,94
TiO_2	0,52	0,006		
ZrO_2	5,71	0,094	0,396	2
Ce_2O_3 etc. . .	3,41	0,030		
Fe_2O_3	1,87	0,036		
MnO	0,44	0,006		
CaO	9,08	0,162		
K_2O	0,38	0,004		
Na_2O	3,99	0,064		
H_2O	1,79	0,100	0,234	1,18
F_2	5,06	0,134		
	102,76			
$-O$	2,13			
	100,63			

The molecular ratios of the niobic acid, the silicic and titanic acids, all the bases, and the water consequently approximate closely to 1 : 1 : 2 : 1, which gives the empirical formula

$$\ddot{R}Nb_2O_6F_2 + \ddot{R}SiO_3.$$

This result may be represented by the following structural formula

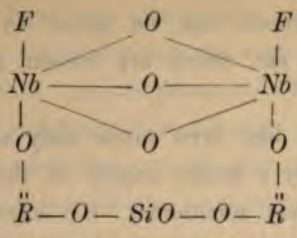

The percentage of niobic acid is a little too high; it was however not quite pure, but contained some amount of tantalic acid, which has not been quantitatively determined. As the atomic weight of tantalum is considerably higher than that of niobium, it follows that, if the two acids had been separately determined, the ratios for them would have been less than those now found. Also the ratio for H_2O and F is a little too high. This may possibly be due to a somewhat too high result of the water determination.

Chalcolamprite thus consists of equivalent amounts of the substances $\ddot{R}Nb_2O_6F_2$ and $\ddot{R}SiO_3$. Common pyrochlore consists of the same niobium compound and, as it seems, varying amounts of $\ddot{R}TiO_3$, where Ti may be replaced by Th, Zr etc. On account of varying results of the analyses it has not as yet been possible to establish a generally acceptable formula for pyrochlore. Rammelsberg[1]) has come to the result that pyrochlore consists of isomorphous mixtures of NaF, $\ddot{R}Nb_2O_6$, $\ddot{R}_2Nb_2O_7$, and $\ddot{R}TiO_3$ or $\ddot{R}TiO_2$, etc. Apart from the improbability of such heterogeneous combinations replacing one another isomorphously, this requires that Na and F should be present in equivalent quantities, which is not always the case in pyrochlore nor ever in chalcolamprite.

As a result of his synthetic investigations Holmqvist[2]) finds the formula $NaCaNb_2O_6F$ for the pyrochlore-minerals.

---

[1]) Monatsber. Berliner Akad. 1871, p. 203.

[2]) Inaugural Diss. Bull. of Geol. Inst. Upsala, 1896. Vol. III, p. 1.

However, this formula has no place for the combinations $RTiO_3$, $RThO_3$, etc. which are present in all natural pyrochlores.

Chalcolamprite has been found only at the locality No. 7 on Narsarsuk. Only a scanty supply of the mineral could be collected. As already mentioned, the chalcolamprite crystals occur partly implanted on larger aegirine individuals, partly attached to a network of thin needles of the same mineral. Such fine aegirine needles often penetrate the chalcolamprite crystals; they are, consequently, older than these. Chalcolamprite is, besides, accompanied by a large number of minerals characteristic of this locality. Thus the brown zircon crystals of type II occur here; they resemble the chalcolamprite crystals very much in colour and size and, in some measure, also as regards the crystalline form. Among the accompanying minerals may, further, be mentioned albite in colourless crystals prismatically elongated in the direction of the vertical axis, and ancylite, which is probably the youngest of the minerals occurring at this locality.

On a single small specimen from the locality No. 2 a couple of small crystals are found which probably consist of chalcolamprite. They, however, differ from the usual chalcolamprite in being bounded by eminently smooth and brilliant faces and in lacking the metallic lustre which is otherwise characteristic of the mineral; being brown in colour, like the other crystals, they have the common vitreous lustre. These crystals occur implanted on a well-developed, brilliant feldspar crystal.

32. Endeiolite.

This new pyrochlore-mineral, has been named from the Greek words ἔνδεια, want, and λίθος, stone, in allusion to the fact that the analysis made on the mineral shows a considerable loss.

Endeiolite has been met with only in the crystallized state. All of the crystals hitherto found are very small, attaining at the most a couple of mm. in diameter. They belong to the cubic system; the octahedron is the only form that has been observed. In most cases the crystals occur implanted on larger aegirine individuals, either isolated or forming continuous crusts. They are in general attached by an octahedral face, parallel to which they are then tabularly developed, so that they stand out very little from the surface on which they rest. In the majority of cases they are sunk a little into their substratum; they must, therefore, have been formed simultaneously with the outer layer of the aegirine crystals on which they occur. Owing to this mode of occurrence the crystals are never developed on all sides, but exhibit at most only three corners and the corresponding number of edges. They are, however, always sharply and distinctly developed, and the faces are fairly bright, though not quite even. The unevenness is generally irregular consisting in low (flat) wart-like elevations. Not infrequently such forms of crystal growth occur in which on an octahedral face another and smaller octahedral face rises, which is conformable to the main face, but may deviate considerably from a position parallel to it. This sometimes gives rise to such grooves on the octahedral edges as those which occur commonly enough *e. g.* on diamond. In general the octahedral form of the crystals is fairly regular, the different faces being of about the same size. Not infrequently, however, occurs a certain tetrahedral development, only four faces being large, while those parallel to them are very small. This ought not, however, to be considered as a proof that the mineral belongs to the tetrahedral class of the cubic system, since no difference in the physical properties has been found to exist between the large faces and the small ones. Another irregularity consists in the crystals often being elongated parallel to an octahedral edge, which gives them a prismatic appearance.

Twinning, which is not known to occur with the other minerals of the pyrochlore group, is found rather often with endeiolite. The twins are formed according to the common «spinel law», and the twins form triangular tables parallel to the twinning-plane with salient angles at the sides and re-entering angles at the corners.

The mineral scratches fluorite with difficulty; its hardness consequently is 4. It is of a somewhat doughy consistency, and impressions may be made on it by the point of a needle. It has no cleavage. The fracture is subconchoidal to splintery.

The colour of endeiolite is a dark chocolate-brown. Only in thinnest splinters is it translucent with reddish-brown colour. The powder is yellowish grey. The crystal faces exhibit a vitreous lustre approaching to metallic. The fresh fracture, on the other hand, shows a distinct greasy lustre. Microscopical sections of sufficient thinness are translucent with straw-yellow colour. The mineral is perfectly optically isotropic and traversed by numerous irregular cracks.

By weighing in benzole the specific gravity of the mineral has been determined as 3,44 (Mauzelius).

Owing to the small quantity in which the mineral has been found and the diminutive size and scattered occurrence of the crystals it has been attended with great difficulties to procure pure material for the analysis. All the available aegirine crystals on which the mineral occurred were scraped, and the material thus obtained was subjected to a laborious and tedious process of hand-picking with the aid of a magnifier. All the pure material that could be obtained in this way, amounted to 0,6176 grams. This was divided into two portions. In one of these, which consisted of 0,3261 gr., H_2O and F were determined. The other ingredients were determined in the remainder. The analysis was performed by Mauzelius and, as has already been stated, simultaneously with the analysis of the chalcolamprite. Both analyses showed a loss of about

10 %. In the chalcolamprite the loss could be ascertained to be SiO_2. Of the endeiolite there was no more material available. Therefore it could not be determined what the loss in this mineral is. However, the similarity of the two minerals in other respects, as well as the way in which the analysis was carried on, afford good reasons for assuming that also in endeiolite the missing constituent is SiO_2. If this is assumed, the result of the analysis is as follows.

		Molecular ratios		
Nb_2O_5	59,93	0,226		1,24
SiO_2	(11,48)	0,190	0,199	1,10
TiO_2	0,76	0,009		
ZrO_2	3,78	0,062	0,362	2
Ce_2O_3	4,43	0,039		
Fe_2O_3	2,81	0,054		
MnO	0,37	0,005		
CaO	7,89	0,140		
K_2O	0,43	0,004		
Na_2O	3,58	0,058		
H_2O	4,14	0,233	0,249	1,36
F_2	0,69	0,016		
	100,29			
$-O$	0,29			
	100			

The molecular ratios of the niobic acid, the assumed silicic acid, all the bases, and the water and fluorine are thus approximately 1 : 1 : 2 : 1. The empirical formula for endeiolite is consequently

$$\ddot{R}\,Nb_2O_6(HO)_2 + \ddot{R}SiO_3.$$

Analogously to the structural formula of chalcolamprite that of endeiolite may be written as follows:

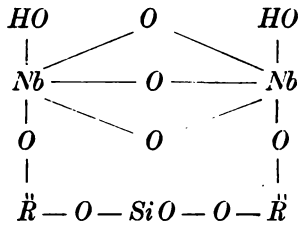

That the ratios for niobic acid and for water and fluorine are somewhat too high may also in this instance be explained as due to the niobic acid not being quite free from tantalic acid and to the determination of the water having given too high a result.

Endeiolite has only been found at the locality No. 2 on Narsarsuk. As mentioned above, the crystals occur implanted on aegirine crystals. These lay imbedded in a porous mass of elpidite prisms and needles, which mass, moreover, contained a number of uncommon minerals such as leucosphenite, epididymite, zinnwaldite, etc. The aegirine crystals in this elpidite formation were rather numerous, but it was only on comparatively few of them that endeiolite crystals were implanted. In some places endeiolite was also deposited on the elpidite needles in the immediate neighbourhood of the aegirine crystal. However, the occurrence of the mineral on elpidite is so subordinate that it may be said to occur almost exclusively on aegirine.

The two minerals chalcolamprite and endeiolite now described are to be considered as species belonging to the pyrochlore group. In chemical constitution they differ from the previously known members of this group by containing SiO_2 instead of TiO_2, ThO_2, etc. Owing to this difference of composition the new minerals also have a considerably lower specific gravity than the hitherto known minerals of the group.

Compared with each other, the two minerals agree in most respects. With regard to the composition they differ only in the fact that chalcolamprite contains fluorine like the previously known pyrochlore minerals, whereas endeiolite chiefly contains hydroxyl. In specific gravity the two minerals differ considerably, and also in hardness. Another point of difference deserving of attention lies in the fact that endeiolite often occurs in twins, whereas twinning is unknown on chalcolamprite as well as on other pyrochlore minerals.

33. Microlite.

As has already been mentioned, G. Nordenskiöld discovered in the Lützen collection a mineral which on examination he found to be microlite. The mineral, which occurred implanted on aegirine individuals, formed microscopical brownish yellow octahedrons. For an analysis no more than 0,0303 grams could be obtained. After deducting silicic acid, ferric oxide and lime for the aegirine mixed with it, the result of the analysis was as follows:

$(Nb, Ta)_2 O_5$	74
$Sn O_2$	4
$Ca O_2$	12,1
$(Ce, La, Di)_2 O_3$	4,2
Loss	5,7

The metallic acids were considered chiefly to be tantalic acid, and the loss fluorine and, possibly, alkalies. From this is calculated the following formula for microlite:

$$Ca_2 Ta_2 O_7.$$

In the Mineralogical department of the Riksmuseum at Stockholm, for which the Lützen collection was purchased, I have had an opportunity of seeing the mineral examined by

G. Nordenskiöld, and I have been able to satisfy myself that the same mineral occurs among those collected by me on Narsarsuk. The material collected by me occurs on several specimens, but in so small quantities that the procuring of material for a more accurate analysis was impossible. The following observations therefore concern only the exterior characters and the mode of occurrence of the mineral.

The octahedral crystals are extremely diminutive, never attaining even 1 mm in diameter. Most of them cannot even be distinctly observed under a strong magnifying-glass. The octahedral form is generally fairly regular; often, however, the crystals are deformed, sometimes by showing a tetrahedral development, sometimes by being elongated prismatically in the direction of an octahedral edge. Besides the principal form (the octahedron), minute faces belonging to the hexahedron {100} have been observed under the microscope. On some of the specimens the crystals are sharply developed with smooth and brilliant faces; on other specimens they are highly rounded and indistinct.

In colour these crystals vary somewhat. The largest and most distinct individuals are brownish yellow inclining to red. The less distinctly developed and rounded crystals are greenish yellow with a tinge of brown. On one specimen occur extremely small crystals forming crusts; these are quite white or colourless.

These crystals, determined by G. Nordenskiöld as microlite, have been found only at the locality No. 3 on Narsarsuk. The specimens on which the mineral occurs lay loose among the gravel. Single crystals and crusts of crystals occur implanted mostly on larger aegirine individuals associated with secondary needles of aegirine and several other minerals as polylithionite, albite, elpidite, etc. Traces of catapleiite of type III have also been observed together with microlite.

34. Apatite.

The only mineral containing phosphorus that has been found on Narsarsuk is apatite, and it occurs there but sparingly. The mineral has been met with only in the crystallized state. The crystals are generally of very small dimensions and present three distinct types of development, each of which has been found at a separate locality, and associated with different minerals in each case. I give here a description of the different types.

Type I. (Yttrium-apatite).

The apatite crystals of the first type seldom attain more than 1^{mm} in their greatest diameter. They are bounded exclusively by the hexagonal prism and the base without a trace of other forms. They are either short prismatic in the direction of the vertical axis or thickly tabular parallel to the base. In most cases the section parallel to the principal axis is of about the same size as the section parallel to the lateral axes, *i. e.* the length and thickness of the prismatic crystals are nearly equal. As regards their development they are rather perfect. The planes are smooth and brilliant, the edges and corners sharp. On the prismatic faces often occurs a feeble striation in vertical direction.

In general the crystals are attached by faces belonging to the prismatic zone, the principal axis being parallel to the substratum. When, as is most frequently the case, many individuals are grown together into druses, they often occupy a parallel position with reference to one another, forming step-like groups and aggregations.

The colour of the mineral is enamel-white, its lustre is of rather an uncommon character, the crystals showing a marked metallic lustre like that occurring on the surface of newly molten silver. This lustre is most characteristic of these crystals. The

mineral is opaque, and only in thin splinters translucent. Even in microscopical sections its diaphaneity is rather slight. Like other apatite it has tolerably weak negative double refraction.

The specific gravity of the mineral has been found by weighing in benzole to be 3,24. This determination has been made by Mauzelius, who has also analyzed the mineral. The analysis gave the following result.

P_2O_5	41,12
F	3,59
CaO	47,67
Y_2O_3 etc.	3,36
Ce_2O_3 etc.	1,52
MgO	0,79
MnO, FeO	trace
H_2O	0,22
Insoluble	2,63
	100,90
$-O = F_2$	1,51
	99,37

The insoluble residue probably consists chiefly of aegirine and neptunite, with which the mineral is often so intimately associated that it can hardly be perfectly separated from them. After deducting this insoluble portion, the values found correspond very well with the usual composition of apatite. Part of the lime is, however, here replaced by rare earths, especially yttrium earths. As far as I know this is the first time that the presence of yttrium earths in apatite has been ascertained. Cerium earths, on the other hand, have been found in apatite from Norway by Th. Scherer[1]). The largest percentage of cerium earths found by him amounts to 5 %. The above

[1]) Nyt Magazin f. Nat. Vol. 5, 1848, p. 308.

analysis shows nearly the same amount of cerium and yttrium earths.

The type of apatite now described has been found only at the locality No. 2 on Narsarsuk. The apatite crystals form small crusts or druses on aegirine, epididymite, elpidite, etc. Other minerals occurring at the locality and associated with apatite are neptunite of type II, clear albite, parisite, cordylite, polylithionite, etc. Of these minerals the apatite, no doubt, is one of the youngest.

Type II.

The apatite crystals of this type generally present a more elongated prismatic form than those of the foregoing type. The largest of them measure about 10^{mm} in length and 1^{mm} in thickness. As regards their development they are as simple as those just described, the only forms present being the hexagonal prism and the base. Sometimes on the edges of the fundamental prism an extremely narrow truncation is observable consisting of the prism of the second order. The faces in the vertical zone are generally smooth and brilliant. Occasionally, however, a feeble striation in vertical direction occurs. The basal faces, on the contrary, are less even; they often have a splintery appearance like a fracture.

The crystals seldom form druses. They occur mostly as isolated individuals implanted on larger aegirine crystals or imbedded in a texture of aegirine needles. These crystals are almost perfectly colourless and clear. Only an extremely faint tinge of green is occasionally observable in them. On the crystalline faces the mineral shows a marked vitreous lustre. Owing to the scanty supply of material no complete analysis has been made on this type of apatite. However, it has been ascertained by quantitative tests that it contains rare earths like the foregoing type.

The apatite crystals of the second type have been found only at the locality No. 5. The mineral occurred here very sparingly and, as mentioned before, closely associated with aegirine. Other accompanying minerals are zircon (of type II), violet fluorite, albite (in crystals elongated in the direction of the vertical axis), etc. The aegirine is here older than the apatite, but the fluorite is younger.

Type III.

A feature common to the first and the second type of apatite crystals is that they are bounded only by the faces of the vertical zone and the base. On the crystals of the third type, on the other hand, there also occur pyramidal forms. Only a single specimen with a couple of crystals of this kind has been found. The crystals are short prismatic, 8^{mm} in length and of about the same thickness. They are rather well developed with tolerably even and bright faces and consequently well suited for angular measurements with the reflection-goniometer. The following forms have been determined:

$m = \{10\bar{1}0\}$, $a = \{11\bar{2}0\}$, $c = \{0001\}$, $x = \{10\bar{1}1\}$, $s = \{11\bar{2}1\}$.

Among the forms of the vertical zone the faces belonging to the prism of the first order, m, are generally broader than those belonging to the prism of the second order, a (Fig. 8, Plate VIII). The faces of the former kind are also, as a rule, more brilliant than the latter. On the latter there occurs a close vertical striation, which causes them to look almost dull. The basal faces are fairly bright, but not quite even. They are divided into (mostly triangular) fields, which do not quite form a single plane, but incline towards one another at angles that deviate a little from 180°. It looks as if the crystals were built up of a number of trigonal prisms in a position not quite parallel with reference to one another. Of such a polysynthetic structure there is, however, no indication in the vertical zone,

the faces of which seem to be perfectly simple. The planes of the pyramidal forms are all smooth and very brilliant. Those of the form x considerably exceed in size those of the form s.

The determination of the different forms is founded on the following angular values.

		Measured	Calculated
$m : c$	$= (10\bar{1}0) : (0001)$	$= 90° 9'$	$90°$
$a : c$	$= (11\bar{2}0) : (0001)$	$= 89° 57'$	$90°$
$m : m$	$= (10\bar{1}0) : (01\bar{1}0)$	$= 59° 58'$	$60°$
$a : m$	$= (11\bar{2}0) : (10\bar{1}0)$	$= 29° 24'$	$30°$
$s : c$	$= (11\bar{2}1) : (0001)$	$= 55° 39'$	$55° 45\frac{1}{2}'$
$x : c$	$= (10\bar{1}1) : (0001)$	$= 40° 13'$	$40° 18\frac{1}{2}'$

The apatite crystals belonging to this type are nearly colourless, only showing a faint tinge of wine-yellow. They are almost perfectly translucent, apart from the fact that they are traversed by numerous cracks mostly running parallel to the faces of the fundamental prism.

The same detached crystal on which the angular measurements were made, was also used for the determination of the specific gravity of the mineral. By weighing in benzole this was found to be 3,175.

The scanty supply of material did not allow of a chemical investigation of the mineral.

The specimen on which the apatite crystals now described occurred was found lying loose at the locality No. 12. Besides the apatite the specimen consists chiefly of elpidite. This mineral never intrudes into the apatite crystals; and when such a crystal has been detached, the elpidite presents brilliant contact surfaces. Consequently the elpidite is here a younger formation than the apatite. Other minerals occurring on the specimen are feldspar, aegirine and parisite, the last mineral being younger than the elpidite.

The 34 species described above are, besides several kinds of feldspar, the only mineral substances which have hitherto been found on Narsarsuk in a quantity sufficiently large to allow of a complete or approximately complete investigation. This number must be regarded as very large considering the small area within which they have been found. Besides these minerals there are on Narsarsuk several others, which have, however, been found in such small quantities that a determination has not been possible. As has already been mentioned, all of the minerals on Narsarsuk were either found lying loose on the surface or obtained by quite superficial digging. The locality has not as yet been worked for minerals to any extent worth mentioning. It cannot, however, be doubted that deeper diggings would result in rich finds, partly of minerals hitherto found there only in small quantities and partly of altogether new species. Few, if any, places are as yet known that equal the Narsarsuk plateau in its richness and variety of minerals; it is to be hoped that, ere long, science will be enriched by further discoveries at this locality.

In the previously published preliminary account of my visit to Greenland [1]) I gave, so far as was then possible, before a complete investigation had been made, a list of the minerals collected. As a matter of course, the minerals then unknown to me could not be designated by definitive names, nor was it possible to wholly avoid errors as to the question whether certain substances were new or previously known minerals. In order to correct such errors as well as to point out the relation between the provisional designations and the descriptions given above, I state here what each mineral from Nar-

[1]) This Journal Vol. 14, p. 221.

sarsuk, designated in the preliminary account either by a few characterizing words or by a provisional name, has now proved to be on further examination.

Provisionally named	Has proved to be on investigation
Hornblende	Arfvedsonite, type II (Riebeckite?).
Thorite	Zircon, type II.
Chlorite	Spodiophyllite.
Pyrochlore	Chalcolamprite.
Yellow tables (gula taflor)	Narsarsukite.
Micaceous strips (glimmeraktiga listor)	Tainiolite.
Hexagonal tables (hexagonala taflor)	Catapleiite, type III.
Yellow anatase-like substance (gult anataslikt)	Ancylite, type I.
White anatase-like substance (hvitt anataslikt)	Zircon?
Small light octahedrons (små ljusa oktaedrar)	Ancylite, type II.
Hexagonal prisms (hexagonala prismor)	Apatite, type II.
Hexagonal prisms with silvery lustre (silfverglänsande hexagonala prismor)	Apatite, type I (Yttrium-apatite).
Colourless octahedrons (färglösa oktaedrar)	Calcite, type V.
Pseudoparisite	Cordylite.
Petalite-like substance (petalitlikt)	Leucosphenite.
Brown tables (bruna taflor)	The material unsufficient for investigation.

Provisionally named	Has proved to be on investigation
Siderite (järnspat)	Rhodochrosite.
Catapleiite-like tables (katapleitlika taflor)	Catapleiite, type II.
Dark-brown prisms (mörkbruna prismor)	Lorenzenite, type I.
Needles with adamantine lustre (diamantglänsande nålar)	Lorenzenite, type II.

Index.

	Page		Page
Aegirine	70	Graphite	15
Analcime	106	Leucosphenite	137
Ancylite	49	Lorenzenite	130
Apatite	173	Magnetite	23
Arfvedsonite	77	Microlite	171
(Barium parisite)	42	Natrolite	107
Biotite	109	Narsarsukite	154
Calcite	24	Neptunite	120
Catapleiite	93	Parisite	29
Chalcolamprite	160	Polylithionite	110
Cordylite	42	Quartz	17
Crocidolite	82	Rhodochrosite	27
Elpidite	146	(Riebeckite?)	80
Endeiolite	166	Sphalerite	16
Epididymite	61	Spodiophyllite	85
Eudialyte	90	Tainiolite	115
Eudidymite	56	Yttrium-apatite	173
Fluorite	16	Zinnwaldite	110
Galenite	15	Zircon	103

Part II.

On some Minerals

from the Nephelite-Syenite at Julianehaab, Greenland

(Epistolite, Britholite, Schizolite and Steenstrupite),

collected by **G. Flink.**

By

O. B. Boeggild and **Chr. Winther.**

Epistolite, a new mineral,

by O. B. Boeggild.

Among the minerals, which Gustav Flink brought from Greenland in the summer of 1897 [1]) were some silverwhite plates, which he supposed to be brucite, but on analysis they have proved to be an absolutely new mineral, which seems to have no relation to any other. The name has been derived from ἐπιστολή, a letter, on account of the mineral's flat rectangular form and white color.

The quantity of epistolite collected has been found in four different localities, all in the neighborhood of Julianehaab in Greenland. Flink states in his above mentioned report that it has been found at Tutop Agdlerkofia and Nunarsiuatiak, two places on the Northern Side of the Firth of Tunugdliarfik. I have also found it on the pieces brought from the bottom of the Firth of Kangerdluarsuk and from the small island Kekertanguak situated in the innermost part of this Firth. The surrounding rock is always nephelitesyenite in which the epistolite is found partly in the pegmatitic veins, partly in masses of marblelike grained albite.

Crystalline form. Crystals with free faces projecting into a cavity have only been found on one of the pieces. However the condition of the faces made the determination of angles very difficult. It was impossible to use the reflecting goniometer, the

---

[1]) Gustav Flink: Berättelse om en Mineralogisk Resa i Syd-Grönland sommaren 1897. Meddelelser om Grønland. XIV. 1898, p. 247, 257.

faces being too poor to give a reflection; the necessary angles were either measured with the contact goniometer or with a microscope. The observations made with the mineral, which is imbedded in the neighboring rock were by far not as good as the above and therefore cannot be taken into consideration. The mineral being extraordinarily brittle, it is impossible to separate it from the surrounding minerals, with which it is connected, without breaking it. The impressions of the faces of the epistolite, which were found, are always too indistinct to make it possible to measure them with exactness, and consequently the following results can only be considered approximately accurate:

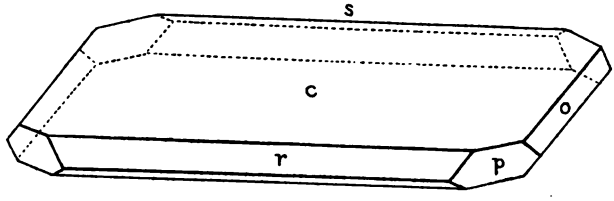

Fig. 1. Epistolite.

Crystallisation monoclinic.

$\beta = 74° 45' = (001) : (100)$

$\dot{a} : \bar{b} : \dot{c} = 0{\cdot}803 : 1 : 1{\cdot}206$

The following were used as fundamental angles:

	Average value	Number of measurements	Variations
(001) : (110)	= 78° 0′	4	76°—80°
(001) : (011)	= 49° 20′	3	48°—50°

further on cleavage faces the angle, which the traces of (110) and $(1\bar{1}0)$ make on (001):

Average value	Number of measurements	Variations
= 102° 30′	13	99°—105° 30′

The faces considered are:

$$c\{001\},\ p\{110\},\ o\{011\},\ r\{\bar{5}04\},\ s\{\bar{1}02\}.$$

The two last forms are determined by:

	Average value	Number of measurements	Variations	Calculated value
$001 : \bar{5}04$	$= 50° 20'$	3	$49° 0'—51° 30'$	$50° 30'$
$001 : \bar{1}02$	$= 42° 7'$	1		$42° 6^1/_2'$

The crystals with free faces have the form of flat, rectangular plates $\neq\{001\}$; thickness about 1 mm., the diameters about 20 mm.

More or less of the faces *r*, *s*, *p* and *o* may be absent or be very indistinct; especially $\{\bar{1}01\}$ and $\{\bar{1}02\}$ are almost always very imperfectly developed. The crystals appear in groups of parallel or subparallel individuals.

The greater part of the epistolite is however formed perfectly inclosed by and connected with the surrounding minerals, especially the grained albite. The epistolite having in most cases crystallized before the greater part of its surroundings, it has also nearly kept its original shape. Generally it appears in big flat plates of a diameter extending upwards to 1 dm. The shape, as mentioned above, is rectangular, with corners cut aslope if the limits are not altogether indistinct. As a rule the plates are nearly parallel and separated by sharp wedges of the surrounding minerals. Frequently the plates are found without any regularity and in some cases appear as a perfect network. On most of the deposits from Kangerdluarsuk the mineral appears as a massive and irregularly shaped aggregate of arched leaves.

Physical and optical properties. The specific gravity as determined with Thoulet's fluid, is 2·885. Hardness $1—1^1/_2$. The brittleness is so great, that the mineral is easily pulverized between the fingers. The cleavage is very characteristic especially perfect $\neq\{001\}$; the leaves, which can be cleaved

out from epistolite are however, on account of its brittleness, not quite as thin as those of gypsum or mica. There appears also on the base a distinct tendency to cleavage in two directions, after the traces of (110) and $(1\bar{1}0)$ under the angle of 102° 30′. However it has not been possible to measure the angle of these cleaving faces with the base on account of their unevenness, and it is therefore not certain whether they correspond to the prism or another face in the zone $[110, 001]$. The epistolite has no special color. The crystal faces are dim, grayish or brownish; the cleaving faces after $\{001\}$, which in most cases is all, that is visible of the mineral, have a very strong silverwhite pearly luster; this is the case especially as regards the pieces from Nunarsiuatiak, which represent the purest variety of the mineral. The deposits from the other localities are more or less yellowish or brownish. When seen under the microscope the small plates only appear transparent to a very slight degree. In the direction of the diagonal cleaving lines two systems of very fine, darker striae are visible, often specially distinct in one direction. Of interpositions aegyrite is most conspicuous and appears in thin rectiliniar needles, generally following two directions $\neq$ the axes $\dot{a}$ and $\bar{b}$, more seldom in other directions.

The refraction was determined by Thoulet's fluid. In a solution of specific gravity 2·865 the limits of the mineral almost disappear, and the approximate index of refraction is thereby found to be 1·67. The epistolite is optically biaxial; the axial plane being $\neq$ the plane of symmetry. The apparent angle of the optic axes for faces $\neq \{001\}$, taken with Adam's apparatus for measuring the axial angle, gives values from 81° to 101°; the average of 7 measurements was 89° 30′. The index of refraction for the glasshemispheres I have found by measuring to be 1·53; from this the interior angle of the optical axes is found to vary from 73° 2′ to 89° 58′, on an average $2V_a$ = c. 80°. The least axis of elasticity is situated in the

obtuse angle β and forms with the axis $\dot{a}$ an angle varying 4° 5′—10° on the average 7°; the mineral is accordingly optically negative. There is inclined dispersion; $v < \rho$; the double refraction is strong and is for faces $\neq \{001\} = 0{\cdot}0297$, as measured by Babinet's Compensator.

Occurrence. As mentioned above the epistolite is found in pegmatitic veins and in masses of grained albite. In the different localities it is found with somewhat different surroundings; the greater part of the mineral from the two places North of the Firth of Tunugdliarfik appears in flat plates, almost always surrounded by albite, which has evidently crystallized later than the epistolite, as it follows exactly the form given by it. Of the other minerals from these places sphalerite has evidently also crystallized later than the epistolite and the same is the case as regards the new mineral schizolite (Winther), which Flink calls «pink columns». The relation to the sodalite is not so clear, it seems however as if the epistolite had crystallized first. The steenstrupite presents itself in an essentially different way in the two localities; at Nunarsiuatiak it protrudes through the plates of epistolite and is accordingly older, at Tutop Agdlerkofia its form has evidently been influenzed by the epistolite and therefore must it have been formed later. The relation to the aegyrite is very different; this mineral had partly crystallized before, partly after the epistolite and as mentioned above they could also have crystallized at the same time.

When examining the pieces found in the localities at the Firth of Kangerdluarsuk the age relations are more difficult to trace. The epistolite is generally found here as irregular masses imbedded in albite, microcline-microperthite, sodalite, arfvedsonite, aegyrite, steenstrupite, eudialyte and sphalerite and it seems to be a later formation than most of these minerals. It is also found together with rinkite and polylithionite and is often connected with these minerals in a more charateristical

however being in any respect related to other silicates containing niobium. It has a certain similarity to the minerals of the clintonite group, but in most respects it is also very different from these.

Britholite, a new mineral,

by Chr. Winther.

This mineral, which G. Flink found in 1897 in the district of Julianehaab, South Greenland, was provisionally called by him «the cappelenitelike mineral» (Meddelelser om Grønland XIV, 245). It is found in the locality of Naujakasik as small brown, apparently hexagonal, prisms imbedded in the pegmatite of the nephelite-syenite which is to be found there.

The name has been formed from *βρίθος*, weight, gravity on account of the mineral's high specific gravity.

Crystalline form. Several of the crystals are fully developed at both ends and their exterior appearance is exactly like a combination of the hexagonal prism $\{10\bar{1}0\}$ and pyramid $\{10\bar{1}1\}$, sometimes with small faces of the prism of second series $\{11\bar{2}0\}$.

If the crystals are therefore considered as belonging to the hexagonal system, they will have the axial ratio $\dot{c} = 0{\cdot}732$.

However by further examination it is quickly found, that this simple form is only apparent and that the crystals really are polysynthetic crystals of rhombic single individuals, the crystals having a somewhat similar form to that of the well-known aragonite crystals from Aragonia.

This was found from the fact, that the measurements of the angles gave very different values for the edge angles and it could be seen distinctly in the transverse sections, that every crystal consisted of a number of united individuals of another tem of crystallization (optic biaxial). Experiments were

made in measuring angles on the transverse section under the microscope, but without much success; in the few cases, where it could be positively determined, that it was a single individual that appeared, the edges were as a rule more or less rounded off or in other ways damaged.

Among the numerous measured values for edge angles there are especially two, which appear frequently. The average values are 28° 11′ and 30° 2′. On the transverse sections edge angles were frequently measured, whose average value was the sum of the above mentioned angles, = 58° 13′. Attention was then directed to the possibility of discovering a case, where the two above mentioned angles followed each other in a regular order and where there at the same time was an angle of 90° between the two faces (rhombic pinacoids). Such a case was found, as will be seen from the following statement, which also shows the ordinary variation in the size of the edge angles:

$a_1 : a_2$	= 25° 58′	
$a_2 : a_3$	= 32° 48′	
$a_3 : a_4$	= 25° 41′	
$a_4 : a_5$	= 28° 57′	
$a_5 : a_6$	= 34° 21′	
$a_6 : a_7$	= 31° 26′	
$a_7 : a_8$	= 31° 10′	
$a_8 : a_9$	= 31° 31′	
$a_9 : a_{10}$	= 31° 43′	89° 55′
$a_{10} : a_{11}$	= 30° 7′	
$a_{11} : a_{12}$	= 28° 5′	
$a_{12} : a_1$	= 28° 14′	

On the transverse sections, as above mentioned, the angle 8° 13′, corresponding to $a_{10} : a_{12}$ above, was measured several mes and the optic axial plane was found to make a right ngle with one of the faces, which included this angle. The

conclusion arrived at is therefore, that the optic axial plane makes a right angle with a_{12} and an ideal transverse section of a single crystal will accordingly appear as shown on the figure:

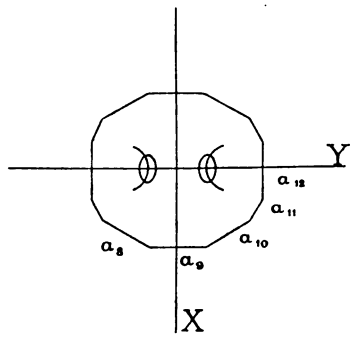

Fig. 2. Britholite.

The pyramidal faces on the apparently hexagonal crystal are partly brachydomes, partly real pyramidal faces. The larger ones among them are almost always brachydomes. The pyramidal faces are rare and belong always to the face a_{10}.

The faces on the separate individuals, which were examined, are the following:

{010} {110} {130} {021} {111}

and the following angles are measured:

		Calculated
(010) : (110)	= *58° 13′	—
(010) : (130)	= 28° 11′	28° 17′
(021) : (010)	= *49° 48′	—
(111) : (110)	= c. 51°	51° 16′

From this the following calculation is made:

$$a : \bar{b} : c = 0{\cdot}620 : 1 : 0{\cdot}423.$$

To understand the law, according to which the apparently hexagonal crystal is built of rhombic individuals, it must be remembered, that the angle between (110) and (010), the two faces, which most frequently appear, is 58° 13′ or near 60°. The examination of the hexagonal transverse sections showed, that the optic axial plane in the far predominant number of cases makes a right angle with the side-lines and that these accordingly belong to the brachypinacoids. At the corners of the hexagon a little of the prismatic face generally shows itself, after which the side-line is slightly bent (60° — 58° 13′ = 1° 47′), because the next individual's brachypinacoid then begins. Schematically the »hexagonal» prism then consists of 6 single rhombic individuals, whose optic axial planes all meet in the crystal's middle-line. The prismatic face {110} is the plan of contact between the separate individuals.

On the edge between {110} and {010} appears sometimes the prismatic face {130}; it is this one, which on the »hexagonal» prism has the appearance of the prism of second series.

This way of formation could in single cases be seen on the outside of the »hexagonal» prism itself. It showed itself especially distinctly, when the brachypinacoid and the appending brachydome on the one individual protruded a little in front of the next individual's prism and pyramidal face. It was very seldom however, that both these sets of faces were so distinct, that a measurement could be made. When such a crystal was examined in transverse section, it seemed on directly observing it, as if the individuals had joined together in a parallel position, as the angle most frequently appearing is very near 60°, however on determining the position of the optic axial planes, it was found, that these crystals also are constructed in conformity with the above mentioned law.

Physical properties. The mineral is brown and opaque. Luster from greasy to vitreous. The double refraction is slight.

The crystals are optically negative. The acute bisectrix is ≠ the vertical axis. The angle of the optic axes is small, but could not be measured exactly, as the plates had to be made very thin to be transparent. The optic orientation is:

$$\breve{a} = \mathfrak{b}$$
$$\bar{b} = \mathfrak{c}$$
$$\dot{c} = \mathfrak{a}$$

The hardness is $5^1/_2$. The fracture is uneven. There is no traceable cleavage.

The specific gravity by means of a pyknometer was found to be 4·446.

Chemical properties. The chemical analysis was made by cand. polyt. Chr. Christensen, who states as follows:

«The mineral was evaporated in a water-bath with nitric acid. After treatment with warm water the silica was filtrated, evaporated with hydrofluoric and sulphuric acid and the residue was then added to the filtrate. Phosphoric acid was then precipitated with ammonium molybdate. To the filtrate ammonia and ammonium sulphide were added. The precipitated hydroxides and sulphides were dissolved in hydrochloric acid, then evaporated to expel hydrochloric acid, diluted and precipitated with oxalic acid. The oxalate of cerium was ignited and weighed. The oxide was dissolved in hydrochloric acid together with a fixed quantity of ferrous salt and the remainder which was not oxidized was titrated with potassium permanganate. By these experiments an excess of oxygen (over Ce_2O_3) was found.»

«Ferric oxide, manganous oxide, and the oxides of magnesium, calcium and sodium were determined in the usual manner after the molybdenum had been precipitated with hydrochloric acid.»

«The fluorine was determined by Berzelius & Rose's method.»

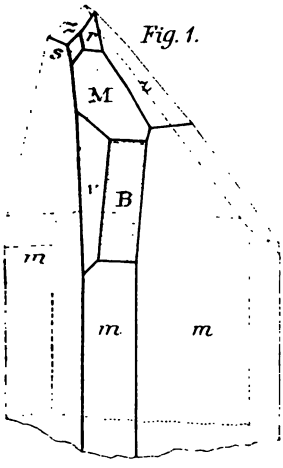

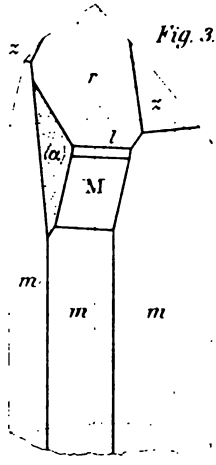

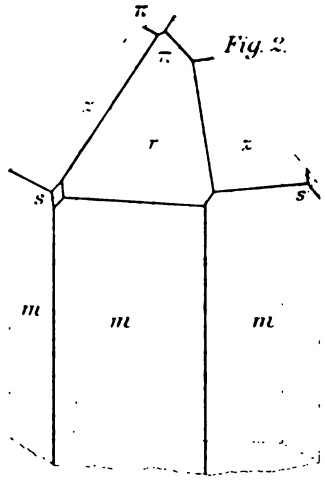

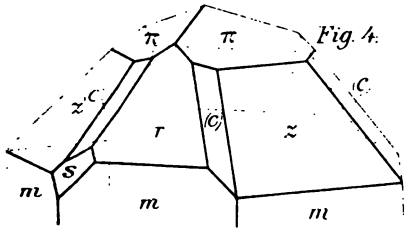

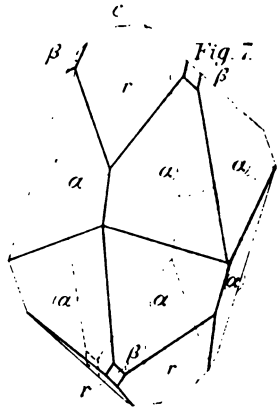

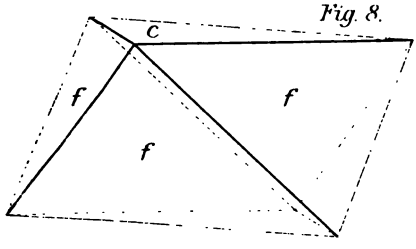

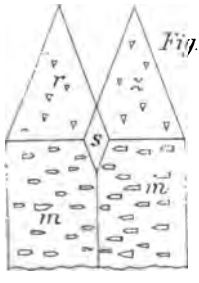

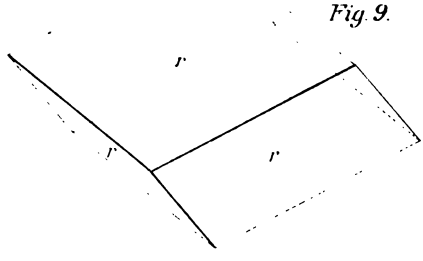

Central-Tryckeriet, Stockholm.

Quartz : 1-5. Calcite : 6-8. Rhodochrosite : 9

form in all these minerals. It is most frequently found in arfvedsonite, through which it passes in all directions.

By examining the thin sections it was found, that the britholite is penetrated by aegyrite-needles, which are not placed in distinct positions in reference to the separate britholite individuals.

Among the single individuals a grayish brown amorphous substance is often found, probably a product of alteration of the britholite. In some cases this substance ramifies into the single individuals and makes the transverse sections opaque, even at a very small thickness of the sections.

Schizolite, a new mineral.

By Chr. Winther.

This mineral, which G. Flink found in 1897 in the Julianehaab district in South Greenland, was provisionally designated by him as «pink columns» (Meddelelser om Grønland XIV, 257). It is found in the locality of Tutop Agdlerkofia in grained albite. Besides a column of this mineral, embedded in the pegmatite from the nephelite-syenite which exists at Kangerdluarsuk, is found on a single piece in Flink's collection from that locality.

The new mineral, on account of its properties, is allied to the pectolite group and may best be characterised as an especially manganous species of the same.

The name has been formed from *σχίζω*, cleave, on account of the minerals marked cleavage.

Physical properties. The schizolite appears as prismatic columns varying from pink to brown, which are found partly separate, partly in radially columnar groups spread in the mass grained albite. The color is originally quite light red, but by it becomes more brownish. The columns are varying

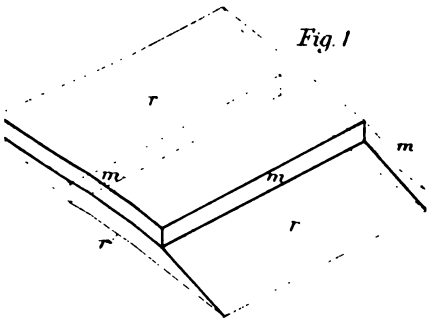

Fig. 1

Fig. 2

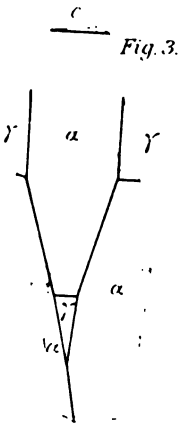

Fig. 3.

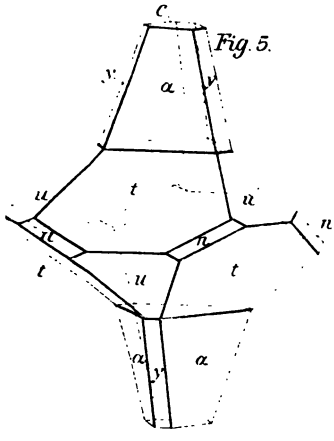

Fig. 5.

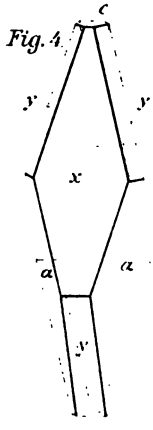

Fig. 4.

Fig. 10.

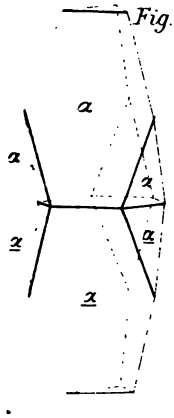

Fig. 6

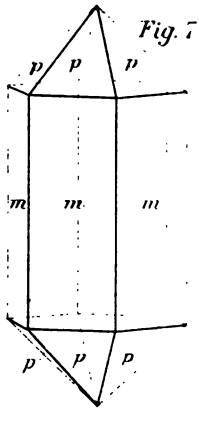

Fig. 7

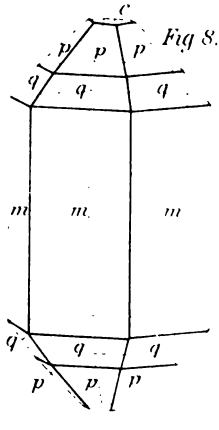

Fig 8.

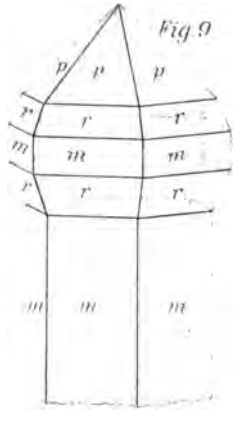

Fig. 9

Funk del.

Rhodochrosite : 1. Parisite : 2 - 6. Kordylite : 7 - 10.

From this is calculated:

$$\dot{a} : \dot{b} : \dot{c} = 1{\cdot}1496 : 1 : 1{\cdot}0343;$$
$$\beta = 85° 32' = (001) : (100).$$

For the pectolite is:

$$\dot{a} : \dot{b} : \dot{c} = 1{\cdot}1140 : 1 : 0{\cdot}9864;$$
$$\beta = 84° 40' = (001) : (100).^{1})$$

The optic axial plane forms a right angle with $\{010\}$. The mineral is optically positive. Of the axes of elasticity is $c = \dot{b}$. $\mathfrak{b}$ lies in the acute angle between the axes $\dot{a}$ and $\dot{c}$. $\dot{c}\mathfrak{b} = 13° 8'$.

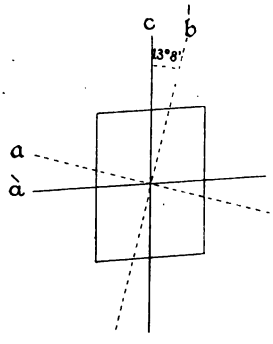

Fig. 4. Schizolite, optic scheme.

The angle between the optic axes is for sodiumlight: $2E_y = 82° 40'$. The double refraction for sodiumlight, measured on $\{100\}$ is 0.02711.

The specific gravity is stated in pycnometer to 3·089. The hardness is $5-5\frac{1}{2}$.

Chemical composition. The analysis was made by cand. polyt. Chr. Christensen, who states the following regarding it:

«The mineral was decomposed with sodium carbonate. The silica was evaporated with hydrofluoric acid. In the filtrate from the silica titanium was precipitated with sodium hyposulphite.»

«Another portion was treated in a platinum-basin with hydrofluoric and sulphuric acid and afterwards oxydized with bromine. The excess of bromine was driven off by boiling. *Fe, Ti* were precipitated with sodium acetate. *Mn, Ce* were then precipitated with ammonium sulphide; the precipitate

---

[1]) Dana, System of Mineralogy 1893, Page 373.

was dissolved in a very small quantity of hydrochloric acid and cerium precipitated with oxalic acid. In the filtrate thus obtained manganese was precipitated with sodium carbonate. In the filtrate from the precipitate by ammonium sulphide, calcium was determined in the usual manner.»

«Sodium was determined in a special portion. Water was estimated directly, as the mineral oxidizes on ignition.»

	I.			II.	III.
	per cent	equiv.		per cent	per cent
SiO_2	51·06	85·10	85·95	51·46	49·97
TiO_2	0·68	0·85		0·69	0·67
Ce_2O_3	1·47	0·91 [1]	57·7	1·41	1·36
FeO	2·79	3·87		2·80	2·70
MnO	12·90	18·15		12·91	12·50
CaO	19·48	34·79		19·50	18·90
Na_2O	10·71	17·24	24·8	9·96	12·36
H_2O	1·36	7·56		1·27	1·54
	100·45			100·00	100·00

I. is schizolite, according to Chr. Christensen's analysis.

II. are the percentages calculated from the formula:

$$15(Si, Ti)O_2 \cdot 10(Ca, Mn, Fe, Ce)O \cdot 4(Na_2, H_2)O.$$

III. are the percentages calculated from the formula:

$$3(Si, Ti)O_2 \cdot 2(Ca, Mn, Fe, Ce)O \cdot (Na_2, H_2)O.$$

For simplification cerium is counted as bivalent. As will be seen from the table the result obtained for the schizolite is the formula:

$$15(Si, Ti)O_2 \cdot 10(Ca, Mn, Fe, Ce)O \cdot 4(Na, H)_2O$$

corresponding to

$$15\,SiO_2 \cdot 10\,RO \cdot 4\,\overset{I}{R}_2O,$$

[1] CeO.

while the generally adopted pectolite formula

$$3\,SiO_2 \cdot 2RO \cdot \overset{1}{R}_2O$$

does not agree very well with the analysis.

Both in composition and crystallographic properties the schizolite differs distinctly from the pectolite, so it is undoubtedly correct to classify it as a special mineral.

Occurrence. The schizolite from Tutop Agdlerkofia appears as mentioned above in a mass of grained albite, which also contains sphalerite, aegyrite and steenstrupite. The columns are on an average a few centimeters in length.

The one column, which was found in the material from Kangerdluarsuk, is imbedded in a pegmatite, which also contains eudialyte, arfvedsonite, aegyrite, white feldspar, steenstrupite and several other minerals.

Under the provisional name of «cubelike crystals» G. Flink (l. c. pag. 245) mentions a mineral found by him in the pegmatite at Naujakasik. On examination it was found to have so much similarity to the schizolite, that it must undoubtedly be considered as a variety of the same. It is therefore indicated in the following as «**schizolite variety A.**» Besides this the pegmatite contains arfvedsonite, white feldspar, eudialyte, nephelite, aegyrite and steenstrupite, exactly as the above mentioned pegmatite from Kangerdluarsuk.

The mineral appears partly as groups of very small and indistinct cubelike crystals, partly as plates, in both cases protruding freely into cavities of the pegmatite. In a few cases the plates are closely connected with the nephelite masses, so that the limit between them is difficult to decide. The color is brown with greasy to vitreous luster. In thin pieces cleaved off the mineral is transparent; the plates are

opaque. A distinct cleavage in two directions (transverse on the plates), is characteristic.

The small crystals are too imperfect to make measurements possible and on the plates no edge planes were found, so the crystallographic material was very poor.

In both cleavage planes there is parallel extinction in the direction of the edge between them. The optic axial plane is parallel with the edge between the cleavage planes. The angle between these was found to be about 85°.

The specific gravity was determined to be 3·084. The hardness is 5—5½. The analysis is by cand. polyt. Chr. Christensen, who states the following:

«The mineral was decomposed with hydrochloric acid; in the filtrate from the silica was precipitated with ammonium sulphide; the precipitate was dissolved in hydrochloric acid and iron precipitated with sodium acetate. In the filtrate from this yttrium was precipitated with oxalic acid. The precipitate of yttrium oxalate was ignited, dissolved in nitric acid and precipitated with ammonia. In the filtrate from the precipitate by oxalic acid manganese was precipitated with sodium carbonate.»

«Calcium and sodium were found in the usual way in the filtrate from the precipitate by ammonium sulphide.»

	I.			II.	III.			IV.
	per cent	equiv.		per cent	per cent	equiv.		per cent
SiO_2	51·44	85·7		51·79	54·09	90·1		53·61
Y_2O_3	2·40	2·1 (YO)		2·19				
FeO	2·01	2·8		2·00 (Fe_2O_3)	0·10	0·14 (FeO)		0·10
MnO	11·69	16·5	57·9	11·63	4·33	6·1	59·5	4·33
CaO	20·53	36·2		20·13	29·82	53·3		29·83
MgO	0·13	0·3		0·12				
Na_2O	9·50	15·3		9·82	9·18	14·8		9·55
H_2O	2·25	12·5	27·8	2·32	2·48	13·8	28·6	2·58
	99·95			100·00	100·00			100·00

I. is «schizolite variety A» according to analysis by Chr. Christensen.

II. are the percent values calculated from the formula:

$$3\,SiO_2 \cdot 2\,(Ca, Mn, Fe, Mg, Y)\,O \cdot (Na_2\,H_2)\,O.$$

III. is manganpectolite (Williams), according to the recalculated analysis (see below).

IV. are the percent values, calculated from the formula

$$3\,SiO_2 \cdot 2\,(Ca, Mn, Fe)\,O \cdot (Na_2\,H_2)\,O.$$

In the above table a manganpectolite, which Williams[1]) found in nephelite-syenite from Arkansas, has been used for the sake of comparison. It contains according to Williams imbedded particles of calcite and the analysis shows that 0·82 per cent of carbonic acid to be present. In the above table the quantity of calcium corresponding to this quantity of carbonic acid is deducted and the rest is recalculated on 100 percent.

The iron in the manganpectolite and the yttrium in the schizolite variety are for the sake of simplification calculated as bivalent.

As will be seen from the table the schizolite variety corresponds exactly with the generally adopted pectolite formula:

$$3\,SiO_2 \cdot 2\,RO \cdot \overset{\text{I}}{R}_2\,O,$$

in the same way as the manganpectolite.

On the other hand a comparison of the analysis for schizolite and schizolite-variety A leads to the supposition that a nearer relationship exists between these two minerals. When disregarding the fact that the schizolite contains cerium, and the schizolite variety yttrium, the principal difference in composition is found to be, that the latter mineral contains much more water, than the former. As the schizolite looks very fresh, while the schizolite

---

[1]) Groth's Zeitschr. 18, 387.

variety makes an impression of being considerably alterated, there is good reason to consider the schizolite variety as being a partly alterated schizolite.

New examinations of Steenstrupite,

by O. B. Boeggild.

A considerable quantity of steenstrupite was collected by G. Flink[1]) on his voyage to Greenland in the summer of 1897, which shows several new and interesting forms not mentioned by Moberg[2]) in his paper on steenstrupite. In the following pages the two above mentioned dissertations are referred to as well as Lorenzen's[3]) first information concerning the steenstrupite.

The mineral occurs in the following localities, all situated in the district of Julianehaab, South Greenland. On the bottom of the Firth of Kangerdluarsuk and Naujakasik to the East of the same the mineral was formerly found, but now it has also been found at Tupersiatsiap, close to the last mentioned place and in 3 localities lying on the Northern side of the Firth of Tunugdliarfik, namely Nunarsiuatiak, Agdlunguak and Tutop Agdlerkofia. The mineral from the last mentioned locality is called by Flink: «Brown rhombohedra»; the steenstrupite found here, and which represents the least altered form of the mineral, occurs also in a type considerably different from the others.

[1]) Berättelse om en Mineralogisk Resa i Syd-Grönland sommaren 1897, by Gust. Flink; this review, Vol. XIV, 1898.

[2]) Joh. Chr. Moberg: Bidrag til kännedomen om Steenstrupin; this review, Vol XX, 1898; in abbreviated form quoted in Zeitschr. f. Krystallographie, Vol. 29 under the name: Zur Kentniss des Steenstrupins.

[3]) Lorenzen: Undersøgelse af nogle Mineraler i Sodalith-Syeniten fra Julianehaabs Distrikt; this review, Vol. II, 1881.

All the localities mentioned are situated in the district of the nephelite-syenite and here the steenstrupite is found partly in pegmatitic veins and partly embedded in grained albite.

Crystalline form. Though a number of the new forms of steenstrupite possess bright and shining faces, they are however not especially adapted for angle measurements. The rhombohedral faces are as a rule horizontally striated so that they give a whole series of signals and the base is always more or less uneven or partly facetted. Therefore the values found for the angles may vary several degrees. However part of them have been sufficiently regular to make it possible to state, that all the formations had the same axial ratio, as Moberg found it to be, viz:

$$\text{Axis } \dot{c} = 1{\cdot}0842;\ (0001):(10\bar{1}1) = 51^\circ 23'.$$

No other faces were found on any of the crystals than those mentioned by Moberg; on the other hand the relative size, in which the different rhombohedra stand to each other, have led to the establishment of the following 3 types:

Type I represents the formerly known formation of steenstrupite of which a drawing by Moberg is here reproduced.

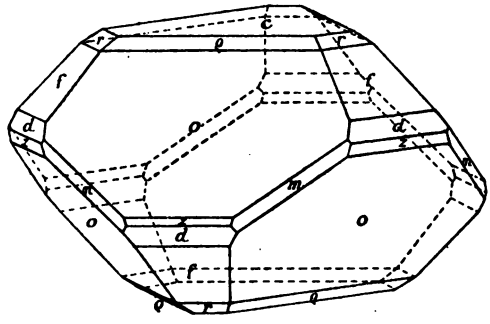

Fig. 5. Steenstrupite, type I.

This type differs from the others on account of its greater number of rhombohedral faces, of which the six, found on the figure, namly $\rho\{50\bar{5}9\}$, $o\{10\bar{1}1\}$, $z\{40\bar{4}1\}$, $d\{02\bar{2}1\}$, $f\{04\bar{4}5\}$ and $r\{01\bar{1}2\}$, are rather common. Besides these $\{01\bar{1}3\}$, $\{08\bar{8}1\}$ and $\{11\bar{2}0\}$ are found on single crystals. $o\{10\bar{1}1\}$ exceeds by far the other rhombohedra in size and then comes $f\{04\bar{4}5\}$. The base is almost triangular, the breadth of the whole crystal about twice the height. The crystals belonging to this type are as a rule between 1·5 and 3 centimeters in diameter. This type is found in all the 3 first mentioned localities, South of the Firth of Tunugdliarfik.

Type II. The crystals are flattened and their breadth several times greater than their height.

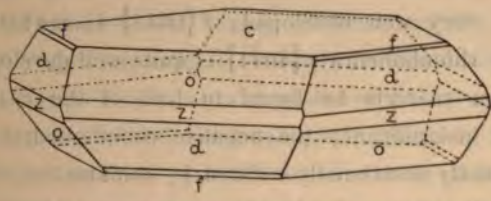

Fig 6. Steenstrupite, type II.

The base hexagonal. The prism is not found and only 4 rhombohedra; of these $o\{10\bar{1}1\}$ and $d\{02\bar{2}1\}$ are predominant and almost equally well developed. $z\{40\bar{4}1\}$ is somewhat smaller and $f\{04\bar{4}5\}$ is always very insignificant, but it is seldom, that it is absent. To this type, the size of which varies between 1 and 2 cm in diameter, belong the crystals from Nunarsiuatiak and Agdlunguak. A smal part of the crystals from Tutop Agdlerkofia belong mostly to this type, though in several respects they are a transition to type I. They are all of small size, 0·5—5 mm.

Type III. The crystals classified under this type are of about the same height and breadth, the base is triangular, but in a position opposite to that of type I.

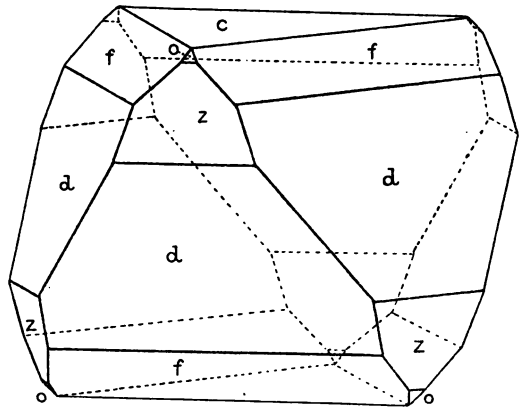

Fig. 7. Steenstrupite, type III.

Here the negative rhombohedra are predominate, especially $d\{02\bar{2}1\}$ is very well developed, $f\{04\bar{4}5\}$ somewhat less. Of the positive rhombohedra $z\{40\bar{4}1\}$ is quite well developed, while $o\{10\bar{1}1\}$ can scarcely be found in half of the cases and is always very insignificant; the negative rhombohedral faces are always distinctly horizontally striated by combination with vicinal faces, the directions of which it was impossible to measure with any decisive result. Of the other rhombohedra $\{08\bar{8}1\}$ was found once the prism never. Under this type, whose size varies between 1 and 10 mm, is classed the greater part of the crystals from Tutop Agdlerkofia. Transitions to type II are very rare.

The steenstrupite appears almost always crystallized; the crystals generally lie single, spread between the other minerals; two or more can also often be found grown together without any traceable regularity. Twins were not observed. On the pieces from Kangerdluarsuk the steenstrupite can also exist as apparently massive without regular exterior limitations. From conclusions made from the weak double refraction, it is not essentially different from the crystallized; every single mass consists probably of one or some few individuals.

Physical and optical properties. The specific gravity was for the crystals of type III determined by the pyknometer to be 3·5122 (average of 3·5119 and 3·5125). According to Moberg the crystallized steenstrupite from Kangerdluarsuk (Type I) has the specific gravity 3·40—3·47, while the massive 3·1901; Lorenzen gives 3·38 without mentioning, whether crystallized or massive. The hardness of the crystals of type III is a little over 5, with the other formations 4—5. The mineral is brittle: the crystals of type III have very slight basal cleavage, the fracture is conchoidal; the other formations are without any trace of cleavage. The crystals of type III have vitreous luster; the color is brown-black; the crystals of type I and II have on the crystal faces almost metallic luster, which on the first is bright black, on the last generally dull brown-black; both have brownish-black shining fracture surfaces. The diaphancity is very insignificant; when cut thin the crystals of type I and II appear of a brown-yellow or brown-gray colour, with the exception of the marginal zone, which in most cases is blackbrown; those of type III are distinctly dichroitic; the color is yellow-brown for rays, whose vibration is $\neq$ the axis c and lighter brown or gray-brown for rays, whose vibration is $\perp$ this axis. The streak of the crystals of type III is perfectly colorless; the other types have in the outer strata of the crystals a intense brown streak, while the inner parts have only a slightly colored one. There are many different kinds of occlusions, fewer with the crystals of type III, which are sometimes entirely without them; with the other types however they appear in great numbers. Some of the most conspicuous of these are the very small black interpositions mentioned by Moberg, which often lie in very regular rows, forming a right angle with the nearest crystal face and having acute limits, where the different directions meet; these interpositions are generally without any regular shape, but in most cases they are more or less bushy. Further must be mentioned

the peculiar brown or black parts nearest the surface; at the outmost part there is often a coherent dark stratum, from which brown tongues shoot inwards along side fissures in the crystal; in a lateral direction these tongues may either by degrees assimilate with the lighter surroundings or they may send out fine brown threads in different directions, forming a more or less regular network; this is especially prettily developed on the crystals of type II. Of other minerals aegyrite appears rather frequently, either as scattered crystals which are often pressed and partly bent or as grained aggregates, filling out fissures in the steenstrupite. Sometimes more isodiametric spaces are found, partly filled with a variated mixture of aegyrite and other minerals of several different colors.

The refraction was determined with Thoulet's fluid. The fluid was of such a degree of concentration, that small grains of the mineral, distributed in it, did not show total reflection under the microscope; the refraction of the fluid used is then stated by its specific gravity. In this way the refraction of the pure steenstrupite (type III) is fixed to be 1·662; that of the more alterated (type I) 1·656. The double refraction is very different with the different types. The crystals of type III are perfectly double refracting and almost similar in this respect; by Babinet's compensator the double refraction is calculated to be 0·00818 being an average of 3 measurements, varying from 0·00732 to 0·00870. The crystals of type II show without exception single or at all events excessively little double refraction in the middle. However they are distinctly double refracting in the outer parts, though hardly to such a high extent as type III. Sometimes the limit between the two parts of the crystal lies very regularly parallel with the crystal faces, in other cases the single refracting parts lie quite irregularly. There are often smooth transitions between the different parts, however a sharp limit is also often found and in such cases the small difference in refraction, which has

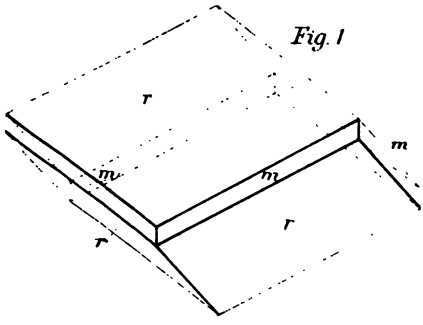

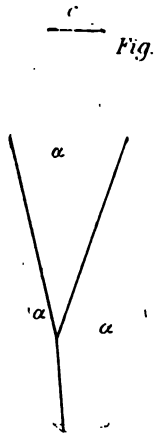

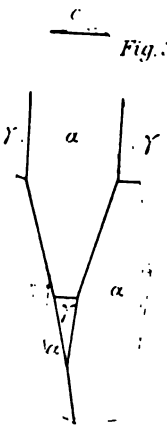

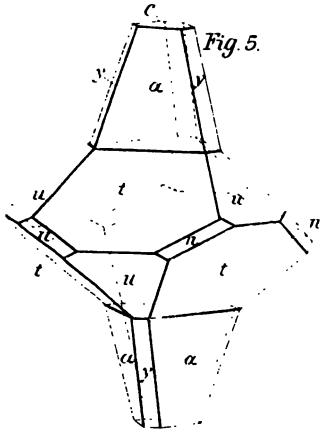

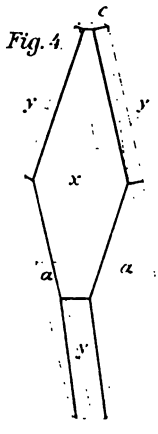

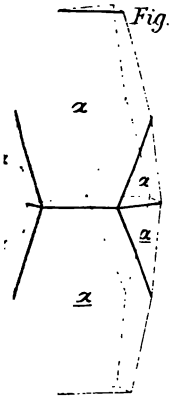

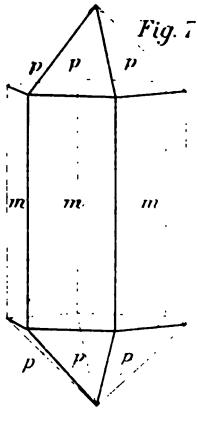

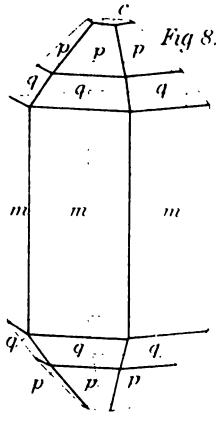

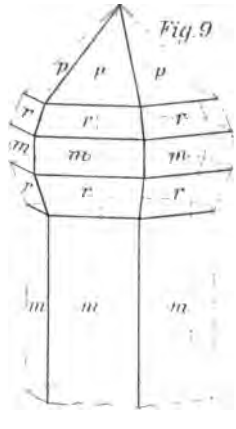

Rhodochrosite: 1. Parisite: 2–6. Kordylite: 7–10.

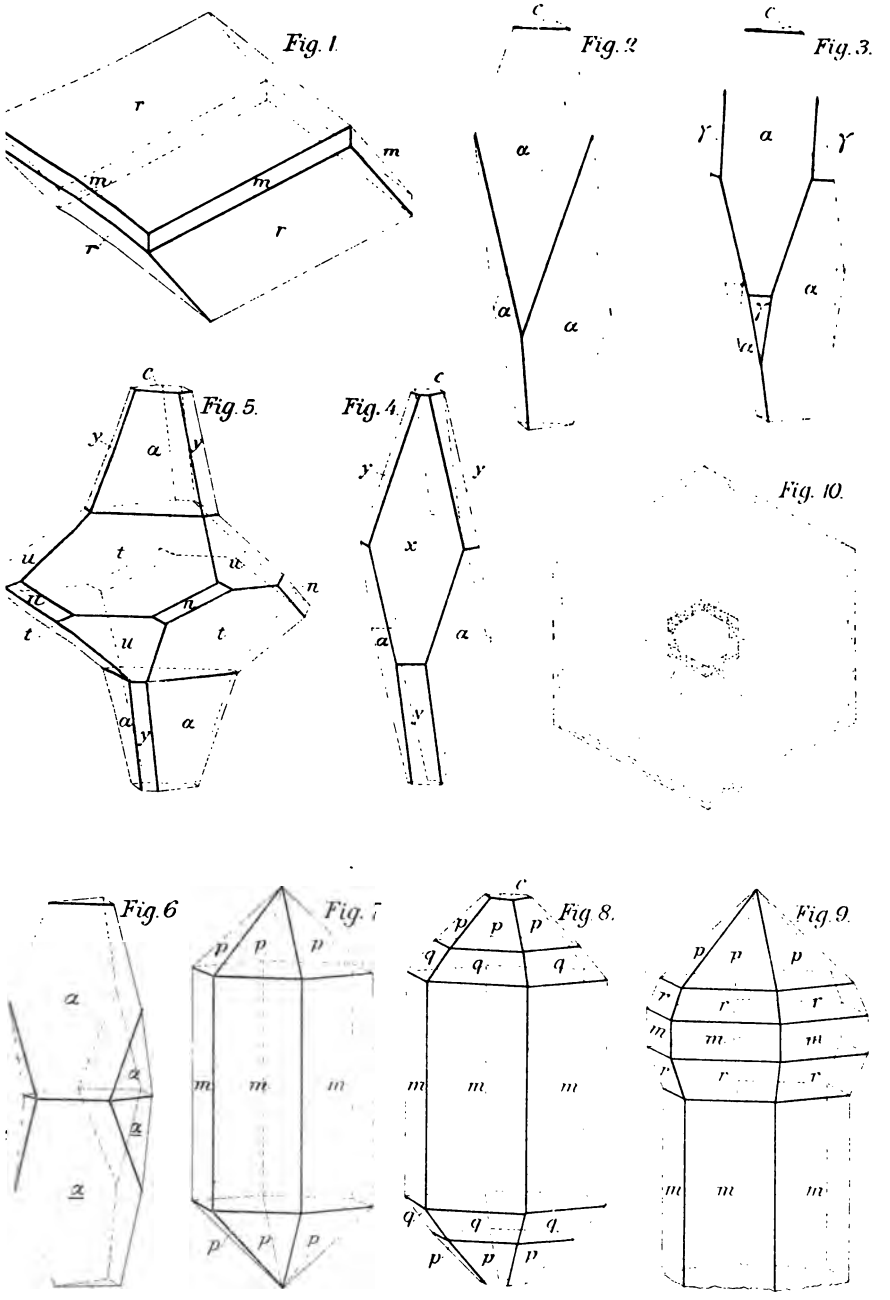

ink del. Central-Tryckeriet, Stockholm.

Rhodochrosite : 1. Parisite : 2 - 6. Kordylite: 7 – 10.

«The steenstrupite is analyzed almost exactly according to the methods of Lorenzen and Blomstrand.»

«The mineral was decomposed with nitric acid (better than hydrochloric acid); the indissolvable residue (very impure silica) was weighed and the silica removed and found as difference. The remainder was treated with sulphuric acid, and after separation of niobic acid added to the filtrate from the silica. The mixed filtrate, evaporated and partly neutralised with ammonia, was precipitated with oxalic acid (*Ce*, *Y*, *Th*). To the filtrate ammonia was added; the precipitate was ignited, dissolved in nitric acid and phosphoric acid separated with ammonium molybdate; in the filtrate the substances were separated as usual.»

«Water was found directly by ignition with sodium carbonate and absorption in calcium chloride tubes. Phosphoric acid was estimated in a special portion after the silica had been removed.»

«No higher oxides of *Ce*, *Mn* were found.»

By studying the above table it will be seen, that in general there is an even process of development from I to III, which accordingly shows how the alteration of the steenstrupite takes place The most remarkable phenomena found are: the constant increase in the quantity of water, while the quantity of soda, silica and phosphoric acid decreases considerably, and the perfect oxydation of MnO to Mn_2O_3 and of Ce_2O_3 to CeO_2. The complete disappearance of the fluorine in the more altered formations is possibly also due to the process of alteration, while the varying quantities of several of the other substances must be supposed to be caused by casual reasons.

On account of the great number of substances it is rather difficult to establish a fixed formula for the steenstrupite. A number of different combinations are possible, however it seems that no one of them is much to be preferred to the others. It is not even certain, that type III of the mineral represents

the perfectly unaltered form. If some of the trivalent metals are placed together with phosphoric and niobic acid, and fluorine combined with calcium, the following composition is arrived at:

$$(Si, Th)_{12} O_{36} (La, Di, Y, Fe)_2 (Mn, Ca, Mg)_3 (Na, H)_{12} \cdot 4 (P, Nb) O_4 \, Ce \cdot Ca F_2 \cdot 4 H_2 O.$$

According to this, the steenstrupite should naturally be a metasilicate, but as the quantity of water and possibly several other circumstances besides must be taken into consideration the classification becomes very uncertain. It would perhaps be most natural to classify the steenstrupite with eudialyte, as the axial ratios of these minerals as proved by Moberg, show a great equality; type III of the steenstrupite has also a considerable similarity in form to the usual Greenlandic eudialyte. However it must be mentioned, that the close relation between these two minerals becomes somewhat improbable, especially when considering that the eudialyte contains a much larger quantity of silica; still at present I do not believe, that it is possible to classify the steenstrupite in any better place in the system.

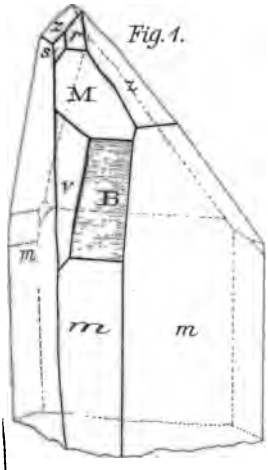

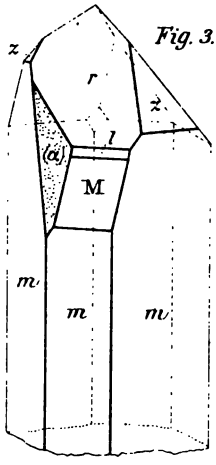

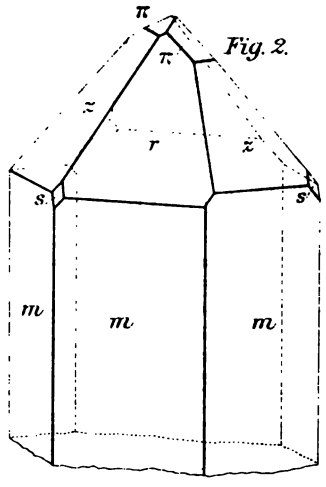

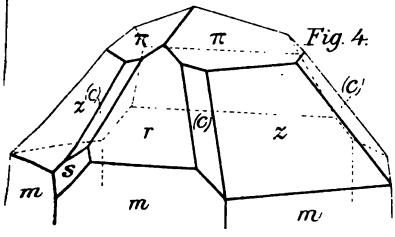

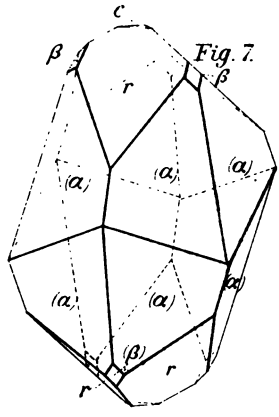

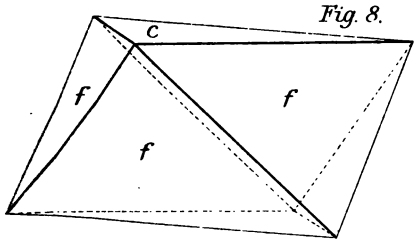

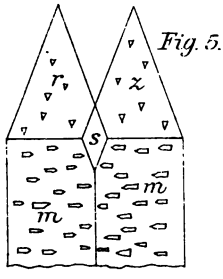

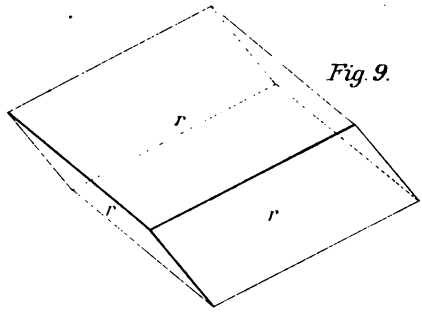

Imk. del. Central-Tryckeriet, Stockholm.

Quartz: 1-5. Calcite: 6-8. Rhodochrosite: 9

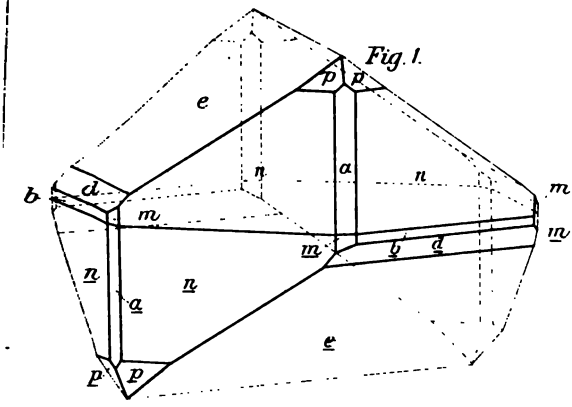

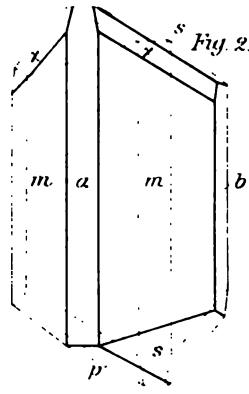

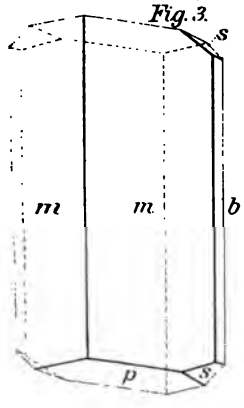

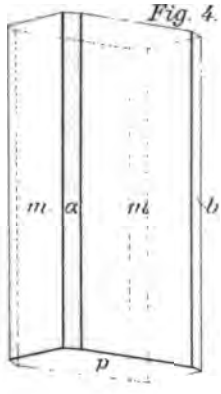

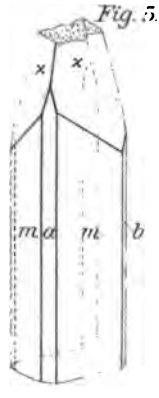

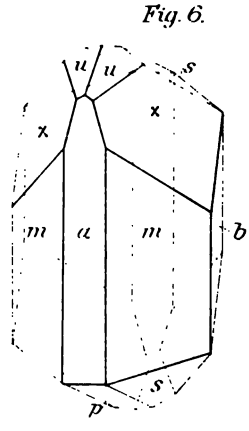

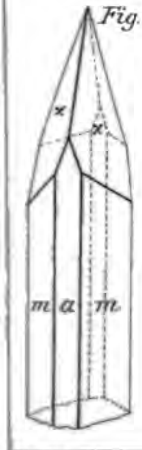

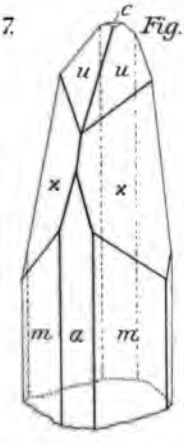

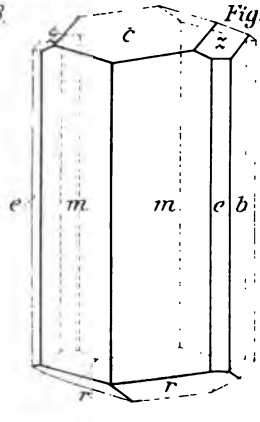

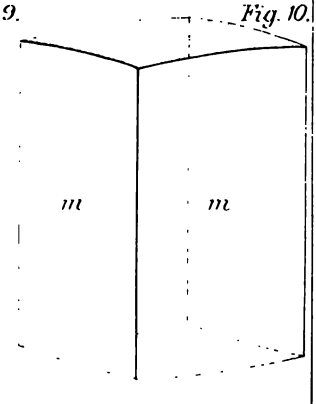

O. Fink del. Central Tryckeriet Stockholm.

Epididymite: 1. **Aegirine**: 2–8. **Arfvedsonite**: 9,10.

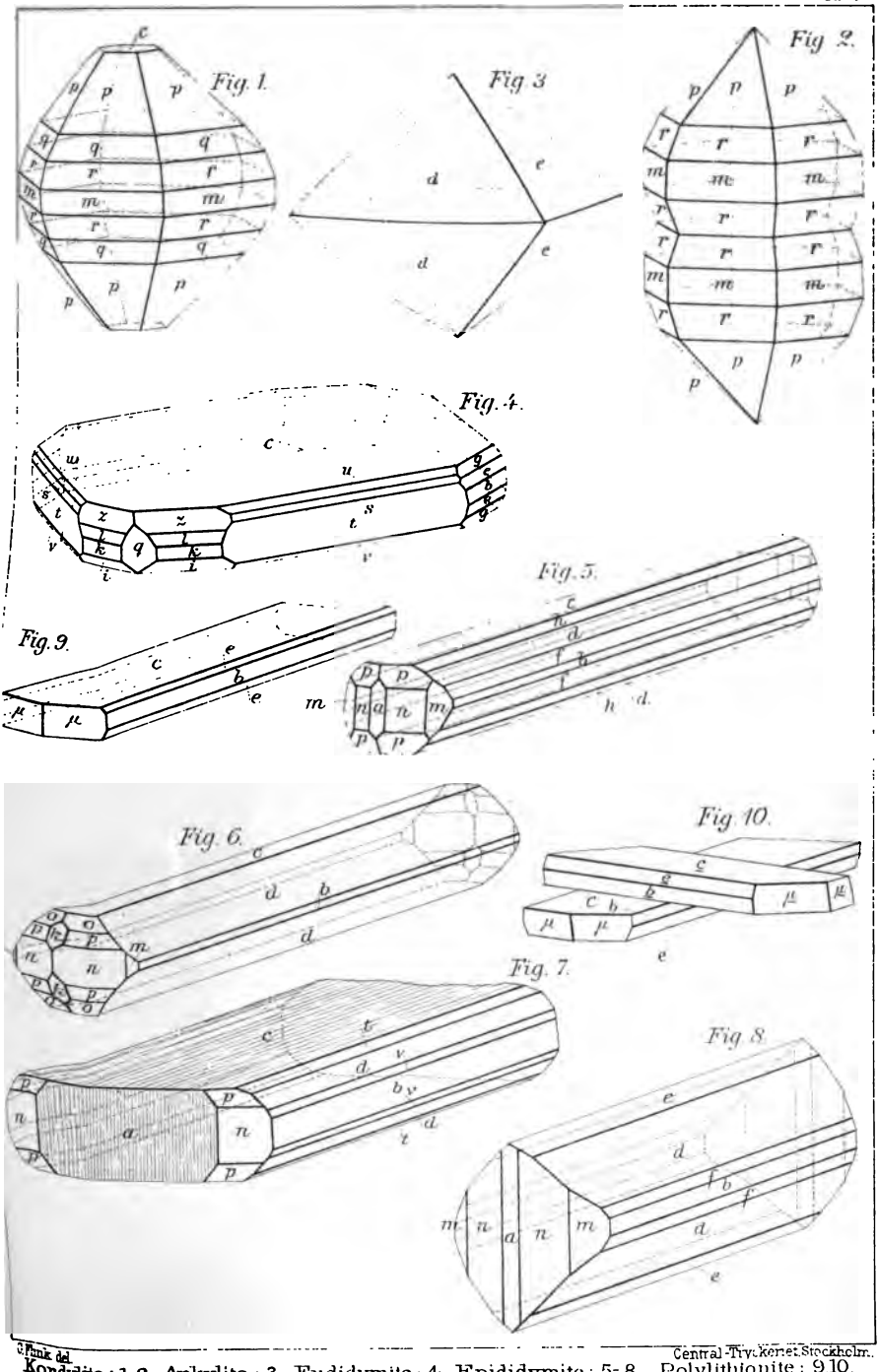

G. Funk del. Central-Tryckeriet Stockholm.

Kordylite : 1-2. **Ankylite** : 3. **Eudidymite** : 4. **Epididymite** : 5-8. **Polylithionite** : 9.10.

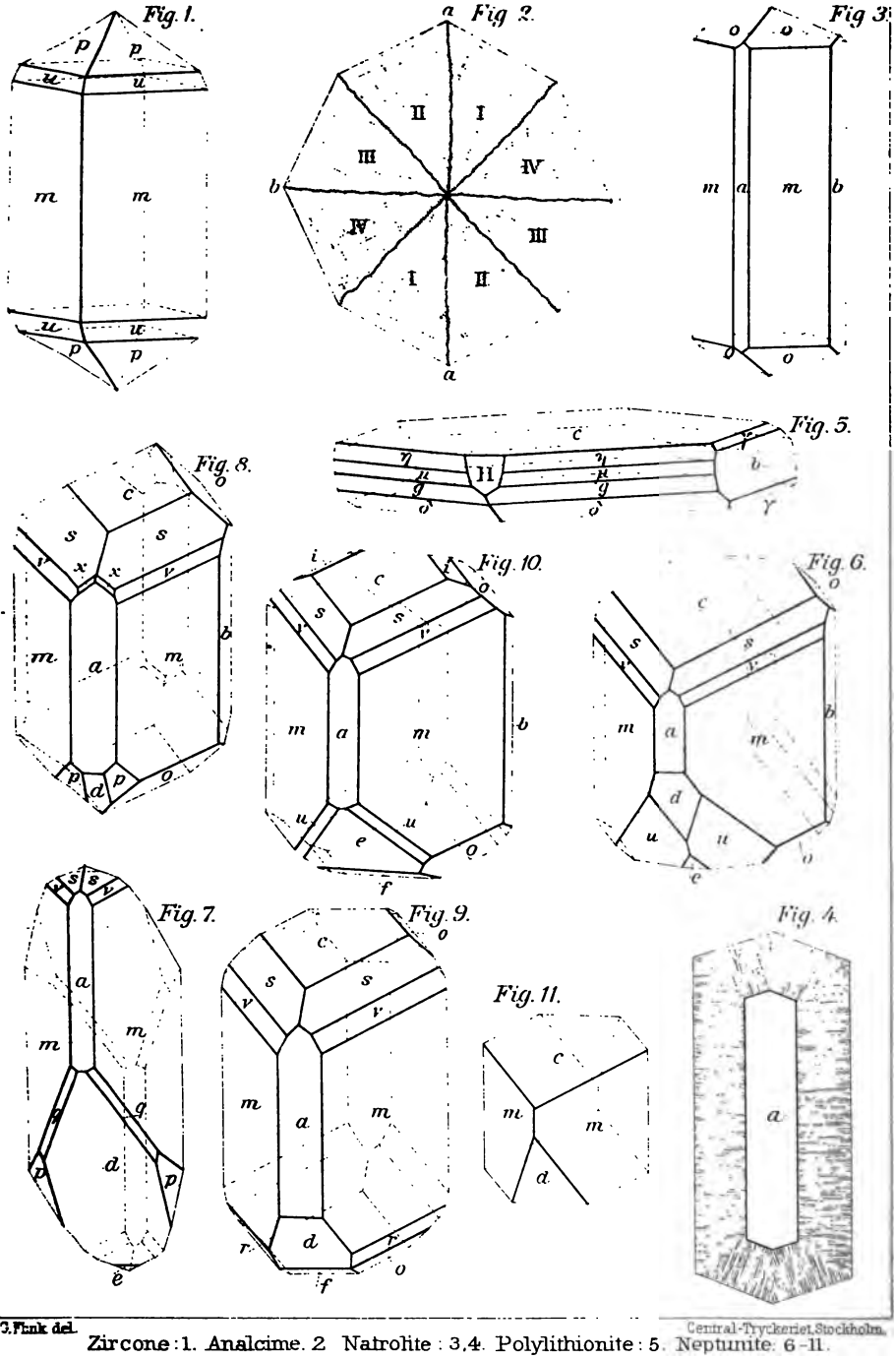

Central-Tryckeriet, Stockholm.

Zircone: 1. Analcime. 2 Natrolite: 3,4. Polylithionite: 5. Neptunite: 6-11.

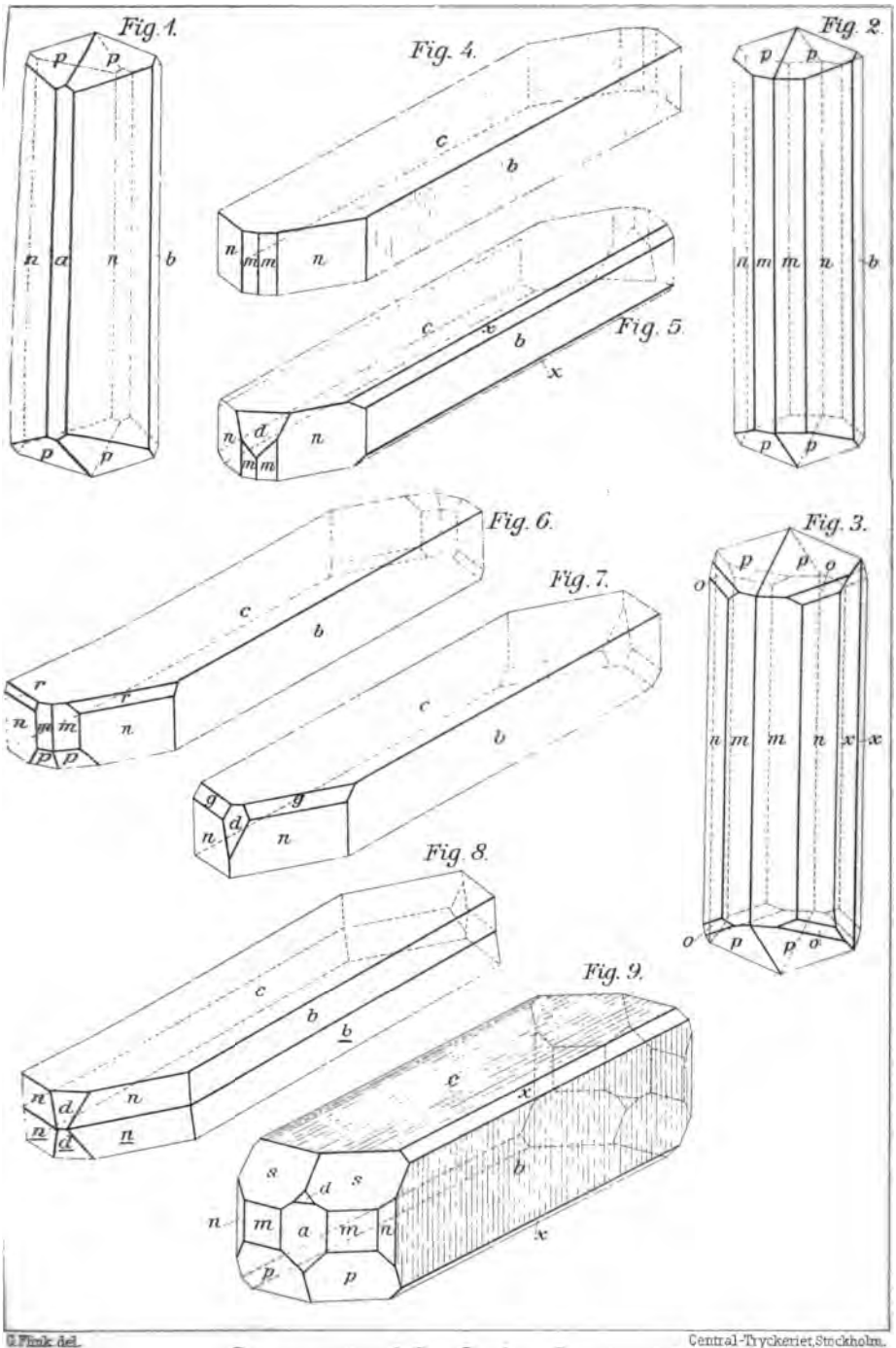

Lorenzenite: 1-3. Leukosphenite: 4-9.

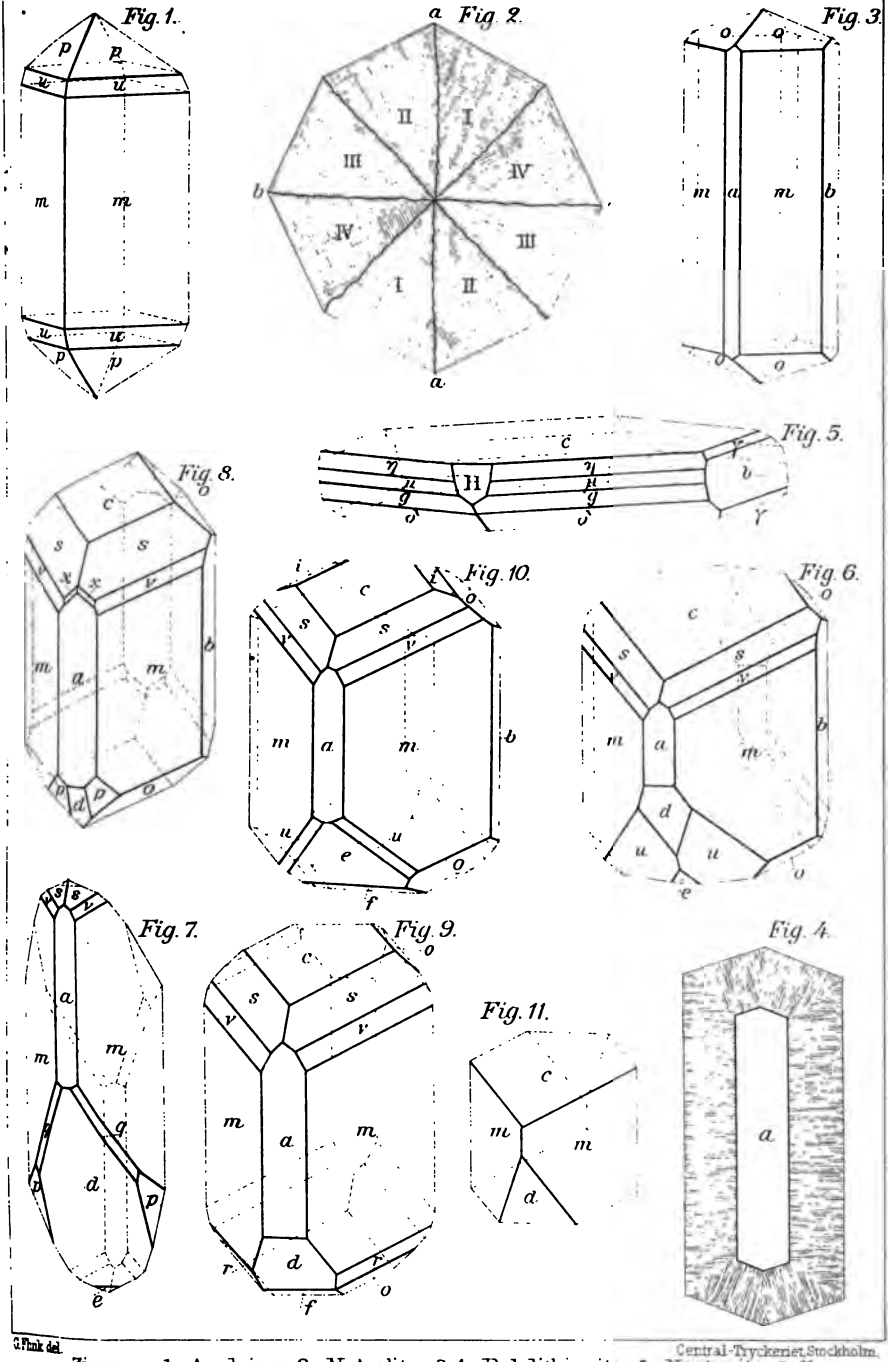

Zircone: 1. Analcime. 2. Natrolite: 3,4. Polylithionite: 5. Neptunite. 6–11.

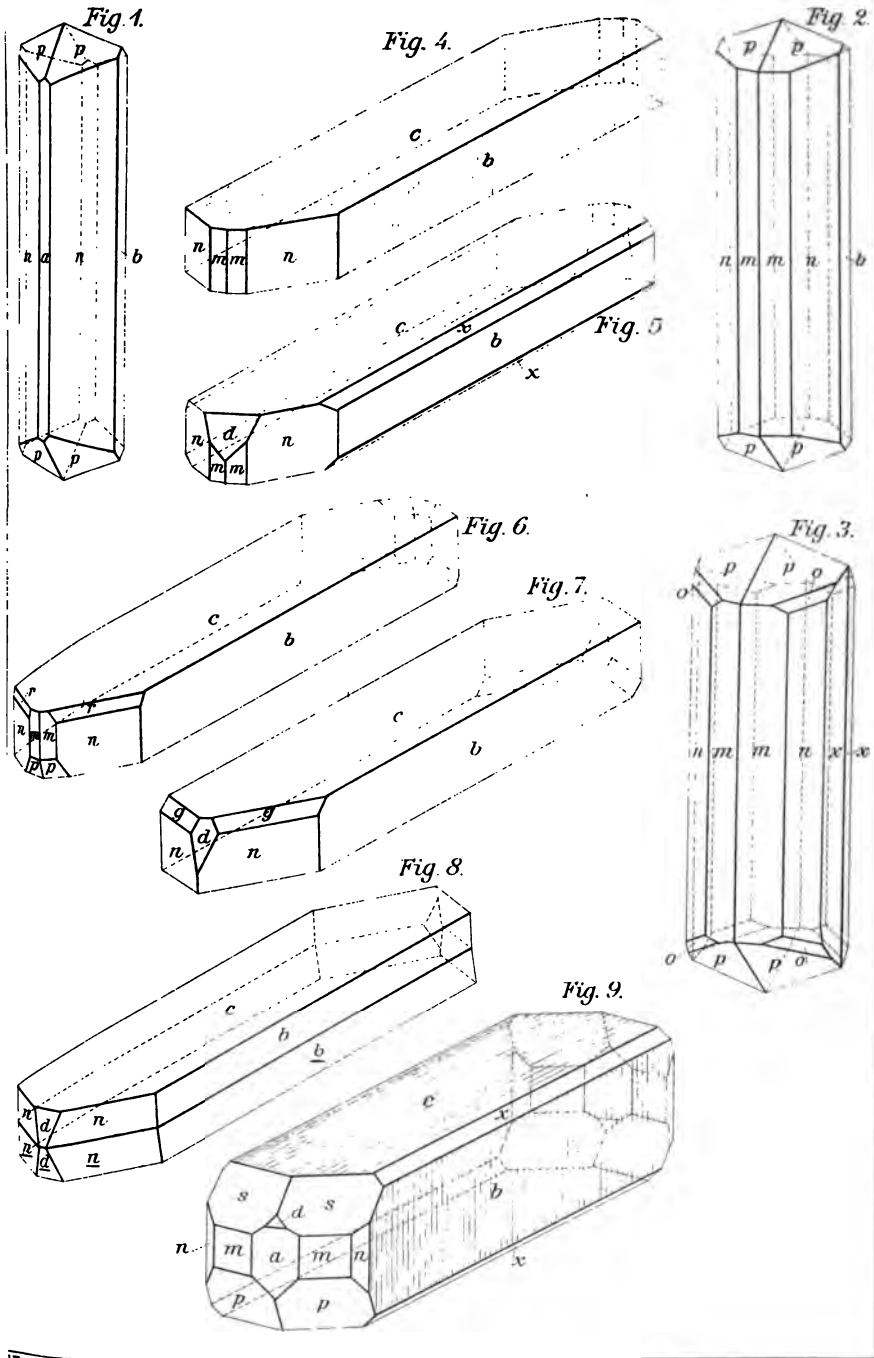

Pink del.
Central-Tryckeriet, Stockholm.

Lorenzenite: 1-3. Leukosphenite: 4-9.

II.

Untersuchungen

an den

eisenführenden Gesteinen der Insel Disko

von

Dr. Th. Nicolau.

II.

Untersuchungen

an den

eisenführenden Gesteinen der Insel Disko

von

Dr. Th. Nicolau.

Literatur.

A. E. Nordenskiöld:; Redogörelse för en expedition till Grönland år 1870; öfvers. af K. Vet. Akad. Förhandl. 1870. Stockholm.

— Expedition to Greenland in the year 1870. Geological Magazine, vol. IX, 1872.

Gustaf Nauckhoff. Om förekomsten af gediget jern i en Basaltgång vid Ovifak i Grönland. Bihang til K. Svenska Vet. Akad. Handling. Meddelad den 17. april 1872.

A. Daubrée. Examen des roches avec fer natif, découvertes en 1870, par M. Nordenskiöld au Groënland. Comptes rendus de l'Academie des sciences t. LXXIV, 24 juin 1872.

K. J. V. Steenstrup. Om de Nordenskiöldske Jernmasser og om Forekomsten af gedigent Jern i Basalt (Aftryk af Vidensk. Medd. fra den naturh. Forening. Kjøbenhavn, 1875 nos 16—19).

A. Daubrèe. Examen des météorites d'Ovifak (Groënland) au point de vue du carbone et des sels solubles qu'ils renferment. Comptes rendus, t. LXXV, 29 juillet 1872.)

F. Wöhler. Analyse des Meteoreisens von Ovifak in Grönland (Nachr. Kön. Ges. der Wiss., Göttingen, 15 Mai 1872).

K. J. V. Steenstrup. Om de Kulførende Dannelser paa Øen Disko. Aftryk af Vidensk. Medd. fra den naturh. Forening. Kjøbenhavn Marts 1874.

Gustaf Nauckhoff. Über das Vorkommen von gediegenen Eisen in einem Basaltgang bei Ovifak in Grönland. Tschermak's Min. Mitth. 1874. S. 109—136.

K. J. V. Steenstrup. Über das Eisen von Grönland. Z. D. G. G. 1876. XVIII. S. 225—233.

G. Tschermak. Der Meteoritenfund bei Ovifak in Grönland. Min. Mitth. 1874.

A. Daubrée. Observations sur la structure intérieure d'une masse de fer natif d'Ovifak. (Comptes rendus, t. MXXXIV, p. 66. 1877.)

A. E. Törnebohm. Über die eisenführenden Gesteine von Ovifak und Assuk in Grönland. (Bih. till K. Svenska Vet. Akad. Handlingar. Band 4. N:o 10. Stockholm 1878.

L. Smith. Mémoire sur le fer natif du Groënland et sur la Dolérite qui le renferme. Extrait des Annales des Chimie et de Physique. 5e Serie, t. XVI. 1879,

K. J. V. Steenstrup. Om Forekomsten af Nikkeljern med Widmannstättenske Figurer i Basalten i Nord-Grønland. Meddelelser om Grønland. IV. Kjøbenhavn 1882.

Joh. Lorenzen. Kemisk undersøgelse af det metalliske jern fra Grønland samt nogle af de dermed følgende bjergarter. Meddelelser om Grønland. IV. Kjøbenhavn 1882.

K. J. V. Steenstrup and Joh. Lorenzen. Nickel-Iron in The Basalt of North Greenland. (From the Mineralogical Magazine, No. 27.)

E. Cohen. Uber das Vorkommen von Eisencarbid (Cohenit) im terrestrischen Nickeleisen von Niakornak bei Jakobshavn in Nord Grönland. 1897. Særtryk af Meddelelser om Grønland. XV.

Durch den von Herrn K. J. V. Steenstrup gemachten Fund von nickelhaltigem gediegenem Eisen, welches die Widmannstätten'schen Figuren zeigte, in anstehenden Gesteinen auf der Insel Disko bei Assuk und am Mellemfjord[1]), Localitäten, die weit ab von Uifak liegen, wo Nordenskiöld die berühmten Blöcke von ged. Eisen entdeckte, wurde der strenge Beweis geliefert, dass das grönländische ged. Eisen tellurischen Ursprungs ist. Dadurch gewinnen die das gediegene Eisen enthaltenden Gesteine eine besondere Bedeutung und es entsteht die Frage: ob das gediegene Eisen als solches aus der Tiefe der Erde stammt und in den Magmen zu Tage gehoben wurde, oder ob es ein secundäres durch Reduktion entstandenes Produkt sei.

Die Beantwortung dieser Frage kann nur durch eingehendes Studium der Zusammensetzung und der geologischen Verhältnisse dieser Gesteine gefunden werden.

Das von Herrn K. J. V. Steenstrup gesammelte Material wurde mir durch die Güte des Herrn Geh. Bergrath Rosenbusch zur Untersuchung übergeben, dem ich dafür wie für seinen Rath zu grossem Dank verpflichtet bin.

---

[1]) K. J. V. Steenstrup. Om Forekomsten af Nikkeljern med Widmannstättenske Figurer i Basalten i Nord-Grønland, p. 123, und On the Existence of Nickel-iron with Widmannstätten's Figures in the Basalt of North Greenland p. 7 and 9.«

Da diese Arbeit die Geschichte der Entdeckung der grossen Eisenblöcke, die Erörterungen bezüglich des meteorischen oder tellurischen Ursprungs als bekannt voraussetzt, verweise ich den Leser gegebenen Falls auf die oben angegebene Literatur.

Indessen scheint mir eine kurze Beschreibung des geologischen Aufbaus der Insel Disko, an deren Küste die das ged. Eisen führenden Gesteine vorkommen, zum Verständniss erforderlich.

Die tiefsten Formationen bestehen aus Gneiss, welcher nicht nur das Innere der Insel, sondern fast die ganze Insel bildet, und im südlichen Theil bei Godhavn sowie auf dem Inseln der Fortunebay erscheint. Der Gneiss geht in Glimmerschiefer über und wird oft von Pegmatitgängen [1]) durchsetzt. Auf dem Gneiss längs der Küste im Süd-Osten, Osten und Nord-Osten liegt ein Streifen von Sedimentärformationen, welcher bei Puilasok [2]) beginnt, sich beinahe ohne Unterbrechung bis nördlich von Igdlokunguak fortsetzt, und bei Ritenbenks Kohlenbruch und Assuk wieder zum Vorschein kommt. Diese Sedimentärgebilde gehören in den liegenden Theilen dem Danien an, in dessen Hangendem gelegentlich das Miocän erscheint. Sowohl die cretacischen Schichten, als auch das Miocän enthalten Braunkohle und zahlreiche fossile Pflanzenreste, und werden überlagert von Basaltdecken und durchsetzt von Basaltgängen. So z. B. erscheinen bei Assuk im Niveau des Meeres die kohleführenden Kreideschichten, überlagert zunächst von einem mit sandigem Thonschifer gemengten Basalttuff, sodann von einer säulenförmig abgesonderten Basaltdecke, über welcher endlich der eisenführende Basalt folgt.

An den westlichen, nördlichen und südlichen Küsten liegen die Kreide- und Miocänschichten unter dem Meeresspiegel, so

[1]) Gustaf Nauckhoff. Tschermak's Min. Mitth. 1874.
[2]) R. Hammer og K. J. V. Steenstrup. Kort over Nord-Grønland. 1878—80.

dass bei Uifak, Mellemfjord und Jernpynten der Basalt unmittelbar im Niveau des Wassers erscheint.

Einen hiermit übereinstimmenden geologischen Aufbau zeigt die Halbinsel Nûgsuak.

Unter den gleichen Bedingungen wurde das gediegene Eisen ausser bei Uifak und Fortunebay bei Assuk, Ivigsarkut, Mellemfjord, Jernpynten und jenseits der Meerenge von Vaigat auf der nördlichen Küste der Halbinsel Nugsuak bei Nûk und Ekaluit und ferner bei Jakobshavn, Niakornak, Arveprindsen Eiland (lose Blöcke) gefunden.

Sowohl hinsichtlich des äusseren Aussehens, als auch der mineralogischen Zusammensetzung und der Structur sind die eisenführenden Gesteine der oben angeführten Fundorte verschieden und besonders zwischen dem Gestein von Uifak und demjenigen von Assuk zeigt sich ein scharf ausgeprägter Unterschied.

Makroskopisch besteht ersteres aus kleinen gleichmässigen Körnern, besitzt dunkelgraue Farbe mit einem Stich ins Bräunliche und das Pulver des Gesteins ist hell braun, während letzteres eine dichte dunkel grünlich graue Grundmasse mit etwas helleren Flecken aufweist. In dieser Grundmasse stecken spärliche Einsprenglinge einer dunkel olivengrünen Minerals, welche gewöhnlich nur $5-6^{mm}\ L \times 2^{mm}\ B$, zuweilen aber $16^{mm}\ L \times 8^{mm}\ B$ erreichen.

Bei der Pulverisirung des eisenführenden Gesteins von Assuk gewahrt man silberweisse Eisenklümpchen und Splitter, welche so geschmeidig sind, dass sie sich durch Reibung im Achatmörser abplatten ohne zu zersplittern. Um feines Pulver zu erhalten muss zuerst das Eisen mittels des Magneten entfernt werden, was bei dem eisenführenden Gestein von Uifak nicht erforderlich ist.

Das Pulver ist aschgrau und bei Behandlung mit verd. HCl entweicht H_2S, H und sehr wenig CO_2.

Die eisenführenden Gesteine, die aus anderen Gegenden der Insel Disko herrühren, sind entweder ähnlich einer von diesen beiden Felsarten, oder stehen doch, wie später bewiesen wird in nahem Zusammenhang mit dem einen oder dem anderen Typus. Es erscheint daher zweckmässig, zuerst das Gestein von Uifak, nachher dasjenige von Assuk zu besprechen und zuletzt die übrigen eisenführenden Gesteine der Insel Disko in ihrer Zugehörigkeit zu diesen beiden Typen vorzuführen.

Das eisenführende Gestein von Uifak.

Bei der makroskopischen Untersuchung des eisenführenden Gesteins von Uifak fällt sofort eine dunkelgrüne, etwas kantendurchscheinende Substanz mit fettartigem Glasglanz und ausgezeichnetem muscheligem Bruch ins Auge.

Splitter dieser Substanz zeigen sich u. d. M. durchsichtig, ziemlich stark lichtbrechend, aber vollkommen isotrop. Hie und da sind in der homogenen Substanz perlitische Sprünge zu erkennen, längs welcher man feine grüne, sehr schwach doppelbrechende Fasern gewahrt.

Die betreffende Substanz ist unmagnetisch, wird aber durch Erhitzen in der Oxydationsflamme des Löthrohrs unter geringer Abrundung der Kanten stark magnetisch. Das Pulver ist braun. In verd. *HCl* lösen sich Stücke und Pulver sehr leicht auf. Specifisches Gewicht bei 16° C. 2,908.

Diese Substanz wird in früheren Beschreibungen als Hisingerit bezeichnet. Meine Analyse (3) zeigt in Übereinstimmung mit der Nauckhoff's [1]) (1) und Prof. Lawrence Smith's [2]) (2), dass sie ein wasserhaltiges Eisenoxyd-oxydul-silicat ist.

---

[1]) Tschermak's Min. Mitth. 1874.

[2]) Mémoire sur le fer natif du Grönland et sur la Dolérite qui le renferme, pag. 31.

In manchen Basalten so z. B. von Carnmoney Hill bei Belfast in Irland, von Franz Josef Land[1]) und von König Karl's Land[2]) kommt auch ein amorphes wasserhaltiges Eisensilicat, der Hullit, vor; inwiefern seine Zusammensetzung von derjenigen des Hisingerits abweicht; zeigt die Analyse (4) [Hardman] — Hullit aus dem Basalt von Carnmoncy Hill.

	1	2	3	4
SiO_2	31,70	30,04	32,07	39,4
Al_2O_3	—	—	—	10,4
Fe_2O_3	51,49	57,12	49,63	20,7
FeO	3,81	—	4,05	3,7
MgO	—	—	1,51	7,5
CaO	—	—	—	4,5
H_2O	13,56	10,89	14,02	13,6
S	—	—	0,11	—
	100,56	98,05	101,39	99,8

Törnebohm meint[3]) die fragliche Substanz im frischen Zustande stehe sehr nahe dem Chlorophäit, aber ihr sp. Gewicht (2,908) ist sehr verschieden von demjenigen des Chlorophäits (2,1—2,2) und viel näher demjenigen des Nigrescits[4]) (2,845). Ausserdem zeigen die Analysen einen viel niedrigeren Gehalt an FeO, MgO und H_2O; auch schmilzt die Substanz sehr schwer.

Als ich im Januar die Untersuchung der Gesteine begann, beobachtete ich auf den frischen Bruchflächen fast nur muschlig brechende, etwas fettig glasglänzende Flecken des betreffenden Minerals; bis November wurden aber die Meisten dieser Flecken

---

[1]) Teall. Quart. Journ. Geol. Soc. 1897, 477 und 1898, 646.

[2]) Axel Hamberg. Uber die Basalte des Königs Karl Landes 1899. S. 514.

[3]) Die eisenführenden Gesteine von Ovifak u. Assuk. S. 10.

[4]) Hornstein. Basalts des unteren Mainthals. Zeitschr. Deutsch. geol. Ges. 1867. XIX. 343.

pechartig und einige matt bräunlich grün. Auf den alten Bruchflächen sind die pechartigen und die matten Flecken zahlreicher als die glasigen[1]).

Bei der Wasserbestimmung gibt die veränderte pechartige Substanz nur 11,87 % H_2O und sie besteht aus feinen grünen, radial angeordneten, schwach doppelbrechenden Fasern, mit sehr kleiner Auslöschungsschiefe (1°—2°), die nicht zu unterscheiden sind von den grünen Fasern, welche auf den Wänden der perlitischen Sprünge des isotropen Hisingerits entstehen. Es unterliegt keinem Zweifel, dass die pechartige und die matte Substanz Umwandlungsproducte des glasigen Hisingerits sind. Die Umwandlung selbst besteht im Wasserverlust und in der höheren Oxydation des Eisens, da Nauckhoff[2]) bemerkte «dass dieselbe Probe, mit welcher die Analyse ausgeführt wurde, nachdem sie fünf Tage im Exsiccator aufbewahrt wurde 3,47 Proc. FeO und nach ungefähr drei Wochen nur noch 1,55 Proc. FeO enthielt.»

Der Hisingerit und seine Umwandlungsproducte enthalten stets grössere oder kleinere Partien von Magnetkies und eine vollkommene Trennung beider Mineralien, auch mit dem Magneten, ist nicht durchführbar, da bei feiner Pulverisirung infolge der starken Vergrösserung der Oberfläche das Eisenoxydul in Eisenoxyd übergeht.

Bei der Behandlung des Pulvers mit HCl war ein schwacher Geruch nach H_2S bemerklich und so musste auch der S-gehalt bestimmt werden, um daraus ein Urtheil über die Quantität des beigemengten Magnetkieses zu gewinnen.

Der Hisingerit, obschon ungleich vertheilt, tritt überall im Gestein auf, und lässt in keiner Weise erkennen, dass er von aussen zwischen die ursprünglichen Gemengtheile des Gesteines

---

[1]) Unmittelbar nach grösseren Sprengungen bei Uifak war das Mineral oft hell bläulichweiss fast wie Edelopal, wurde aber schnell im Tageslichte braun und schwarz. K. J. V. S.

[2]) Tschermak's Min. Mitth. 1874. S. 123.

eingedrungen sei, wodurch aber seine secundäre Entstehung nicht ausgeschlossen ist.

Auf der Oberfläche der Handstücke des Basaltes von Uifak, die ich zur Verfügung hatte, ist mit blossem Auge oder mit der Lupe kein Korn ged. Eisen zu sehen, aber wenn man das Pulver in Berührung mit neutraler $CuSO_4$-Lösung zwei Tage stehen lässt, und dann auslaugt, bis im Waschwasser keine Spur von $CuSO_4$ mehr nachweissbar ist, und nun eine Woche lang mit Ammoniak behandelt, so ist das Filtrat blau und gibt mit H_2S u. $K_4Fe^4(CN)_6$ die Reactionen des Kupfers. Das Gesteinspulver mit Ammoniak behandelt gibt kein blaues Filtrat. Folglich ist gediegenes Eisen vorhanden. Unten den Theilchen, die man mit dem Magneten aus dem Pulver ausziehen kann, finden sich nur sehr spährliche und kleine Theilchen von stahlgrauer Farbe, welche mit $CuSO_4$-Lösung auf dem Objectträger behandelt Kupfer ausscheiden.

Das eisenführende Gestein von Uifak ist im Allgemeinen mittelkörnig und von doleritischem Habitus. Zuweilen erreichen die Plagioklastafeln 3^{mm} Länge auf 2^{mm} Breite. Aber an gewissen Stellen wird das Korn kleiner, so dass man den Eindruck erhält, als wären Doleritklumpen, durch eine aus feineren Körnern bestehende Masse verbunden. Der Übergang zwischen den gröber- und feinerkörnigen Theilen ist jedoch ein allmähliger.

U. d. M. zeigt der Basalt von Uifak, besonders deutlich wo er doleritischen Habitus hat, die für Diabase charakteristische ophitische Structur.

Von den beiden Hauptgemengtheilen — Plagioklas und Pyroxen — ist der erste beständig idiomorph, letzterer meist allotriomorph.

Nebengemengtheile sind Ilmenit und Magnetkies. Viel ungleichmässiger vertheilt treten der isotrope Hisingerit und sein faseriges Umwandlungsproduct, der Graphit und eine Gesteinsbasis auf. Der Plagioklas des doleritischen eisenfürenden Ba-

saltes von Uifak lässt sich nicht verschiedenen Generationen zuschreiben. Er ist nach der Kante P/M leistenförmig gestreckt oder dünntafelförmig nach M ausgebildet und zeigt neben dem absolut herrschenden Albitgesetz weit seltener auch Zwillingsbildung nach dem Karlsbader und Bavenoer Gesetz. Um den Plagioklas zu bestimmen wurden zunächst Spaltblättchen untersucht; diejehnigen nach $oP\ \{001\}\ P$ ergaben Auslöschungsschiefen von 13° 45′, 14°, 14° 15′, 14° 30′, 14° 45′, 15° 15′, was nach der Schuster'schen Curve[1]) auf einen Plagioklas von der Zusammensetzung $Ab_{30}An_{70} - Ab_{27}An_{73}$ oder ein Glied zwischen dem Labradorit Ab_1An_2 und dem Bytownit Ab_1An_3 deutet. Da aber gerade an dieser Stelle der Plagioklasreihe die Auslöschungen auf der basischen Endfläche wenig von einander entfernt sind, und eine kleine Abweichung von der richtigen Lage einen Fehler nach sich zieht[2]), so ist die betreffende Bestimmung wenig zuverlässig. Infolge dessen wurde mehr Aufmerksamkeit den Auslöschungsschiefen auf $M \cdot \infty P \breve{\infty}\ \{010\}$ geschenkt. Solche Spaltblättchen, auf welchen die Spaltrisse nach $P\ \{001\}$ und $\infty P\ \{110\}$ Winkel von 114°—115° mit einander bildeten, zeigten im conv. Licht einen Axenbalken ohne Austritt der Axe selbst im Gesichtsfelde und löschten nach einer Richtung aus, welche näher der langen Diagonale des Parallelogramms der Spaltrisse liegt. Die gemessenen Auslöschungsschiefen sind: 28° 30′, 28° 40′, 29°, 29° 15′, was einen Plagioklas von der Zusammensetzung $Ab_{33}An_{67} - Ab_{30}An_{70}$ anzeigt. Danach ermitteln die Auslöschungsschiefen auf der Längsfläche einen etwas weniger basischen Plagioklas, als diejenigen auf der Endfläche, haben jedoch ein gemeinsames Ergebniss $Ab_{30}An_{70}$.

Als Maximum der Auslöschungsschiefe wurde mehrmals 41° und zweimal auch 44° 30′ beobachtet, was nach der Michel-

---

[1]) Tschermak's Min. und petr. Mitth. 1880 S. 253.
[2]) Max Schuster. Tschermak's Min. und petr. Mitth. 1880. S. 187.

Lévy'schen Curve [1]) $Ab_{35}An_{65}$ ergiebt. Da aber wie oben erwähnt, hie und da auch solche Zwillingsbildungen vorkommen, die gleichzeitig nach dem Albit und Karlsbader Gesetz verbundene Lamellen zeigen, und die Untersuchung derselben für die betreffende Bestimmung von grosser Wichtigkeit ist, benutzte ich derartige Schnitte ebenfalls, um zu constatiren, inwiefern die Resultate mit einander übereinstimmen würden.

Ziemlich häufig sind nur 3 Individuen des Doppelzwillings vorhanden; bei diesen wurden folgende Auslöschungsschiefen gemessen:

	1	1′	2′
I	37°	41°	23° 30′
II	37° 30′	42°	24°
III	38°	42°	26°

Nur selten habe ich jede Hälfte aus je zwei Individuen bestehend und in diesem Falle beobachtet:

$(1) = 37°$, $(1') = 42°$, $(2) = 20°$, $(2') = 25°$.

Aus der letzten Beobachtung ergibt sich $\triangle = 34°$. Diese Differenz in Übereinstimmung mit dem Maximum von 44° — 44° 30′ zeigt nach der Michel-Lévy'schen Curve einen Plagioklas an, dessen Zusammensetzung $Ab_{30}An_{70}$ ist d. h. einen sauren Bytownit.

Glücklicherweise gelang es ein zur Bestimmung des specifischen Gewichtes anwendbares Spaltblättchen zu erhalten, und nach der Prüfung auf seine Reinheit u. d. M., ergab sich beim Schwebenlassen in Thoulet'scher Lösung und bei $15^1/_2°$ C. 2,715, was die optische Bestimmung des betreffenden Plagioklases bestätigt.

Prof. Lawrence Smith hat den Plagioklas des eisenführenden doleritischen Basaltes von Uifak nur auf optischem Wege als Labradorit bestimmt [2]); allein wenn man in Betracht

[1]) Détermination des Feldspaths dans les plaques minces. pag. 31 et 34.
[2]) Mémoire sur le fer natif du Grönland et sur la Dolérite qui le renferme. pag. 54.

zieht, dass nicht von allen Mineralogen und Petrographen dieselbe Gliederung der Plagioklasreihe in Gruppen angenommen wird, so ist der Unterschied zwischen beiden Bestimmungen unbeträchtlich und ist wohl mehr durch die angenommenen Grenzen der Reihenglieder, als durch wirkliche Verschiedenheiten zu erklären.

Der Pyroxen des eisenführenden Basaltes von Uifak ist von hellbrauner Farbe und enthält Flüssigkeits- und Glaseinschlüsse, von dened die letzten zuweilen 2—3 Libellen besitzen. Obschon grösstentheils allotriomorph, tritt er auch idiomorph begrenzt auf, und die basischen Schnitte zeigen das Vorwalten der Flächen $\infty P\breve{\infty}\{100\}$ und $\infty P\bar{\infty}\{010\}$.

Der kaum erwähnenswerte Zwilling nach $\infty P\breve{\infty}\{100\}$ kommt sehr häufig vor und hie und da sind zwischen den beiden Hälften desselben 2—3 ungleiche polysynthetische Zwillingslamellen eingeschaltet. Auf den Längsschnitten, die das Interferenzbild der optischen Normale deutlich zeigten, wurde $c:c = 44° 30'$ beobachtet.

Das sp. Gewicht bei $16^1/_2°$ C. (mittels Pyknometer) ist 3·403. Von dem Magneten wird er ziemlich stark angezogen.

Nach den angegebenen Eigenschaften ist der fragliche Pyroxen als basaltischer Augit zu bestimmen. Die folgende chemische Analyse zeigt ihn titan- und manganhaltig und bestätigt die physikalische Bestimmung.

SiO_2	51,19
TiO_2	0,72
Al_2O_3	6,14
Mn_3O_4	0,53
Fe_2O_3	2,40
FeO	7,94
MgO	16,91
CaO	14,56
Na_2O	0,72
K_2O	0,28
	101,39

Der allotriomorphe Pyroxen hat sich im allgemeinen frisch erhalten, aber spärlich treten auch sowohl idiomorphe als auch allotriomorphe Individuen auf, die verhältnissmässig etwas grösser sind und die stark der Chloritisirung verfielen.

Obschon bezüglich der Farbe und anderer Eigenschaften kein Unterschied zu gewahren ist, könnte der chloritisirte Pyroxen doch einer älteren Generation angehören.

Der Nachweis des Olivins ist etwas schwierig, da wie schon Törnebohm bemerkt[1]), dieser Gemengtheil nicht den gewöhnlichen Charakter des in Basalten vorkommenden Olivins besitzt, nämlich einsprenglingsartig in grösseren Individuen hervorzutreten, sondern viel mehr in kleinen farblosen und ganz frischen Körnern vorkommt, die nur hie und da neben einander gedrängt liegen.

Nach einem kurzen Angriff mit HCl werden die Plagioklasleisten durch Methylenblau gefärbt, während die als Olivin gedeuteten Körner farblos und unverändert bleiben. Nur durch eine verlängerte Behandlung mit H_2SO_4 kann man sie angreifen und in Zusammenhang mit dem starken Relief und der Doppelbrechung die Diagnose der fraglichen Körner feststellen. Der Widerstand beim Angriff gibt Anlass zur Vermuthung, dass dieser Olivin sehr MgO-reich ist. Die Olivinkörner enthalten ziemlich zahlreiche Glaseinschlüsse mit Libellen. Obwohl sehr selten, so sind doch auch grössere idiomorphe Olivinindividuen zu beobachten, die besonders randlich serpentinisirt erscheinen. Nie aber habe ich Olivinkrystalle von der Grösse derjenigen des Pyroxens wahrgenommen. Es scheint danach, dass der Olivin in zwei Generationen vorkommt, und dass derjenige der ersten Generation noch spärlicher auftritt, als die der zweiten Generation anhörigen Körner. Infolgedessen ist das eisenführende Gestein von Uifak ein olivinarmer, aber kein olivinfreier Basalt.

[1]) Bihang Till. K. Sv. Vet. Akad. Band 5. N:o 10. Die eisenführenden Gesteine von Ovifak u. Assuk. S. 6.

Neben den erwähnten Hauptgemengtheilen zeigt die mikroskopische Untersuchung, dass an dem Aufbau des Gesteines auch in nicht unbeträchtlicher Menge eine fein faserige grüne Substanz betheiligt ist, deren Fasern oft zu Sphärokrystallen oder doch zu radial faserigen Massen geordnet sind. Die Längsrichtung ist Axe kleinster Elasticität. Die betreffende Substanz bildet Flecken zwischen den übrigen Gemengtheilen und ist manchmal von braunen Adern durchzogen. Von *HCl* wird sie leicht aufgelöst; nach kurzem Angriff saugt sie die Färbmittel auf; durch Glühen wird sie schwärzlich braun. Der frische isotrope Hisingerit ist seltener wahrzunehmen und bildet zwischen den Hauptgemengtheilen keilförmige Durchschnitte, die ähnlich aussehen, wie diejenigen des Pyroxens. Solche Keile bildet auch die Basis, die von dem frischen Hisingerit sowohl durch ihre dunkelbraune Farbe als auch noch sicherer durch ihre schwache Lichtbrechung zu erkennen ist.

Dass der isotrope Hisingerit die aus grünen Fasern bestehende Substanz erzeugt, wurde direct nachgewiesen, aber die Basis wandelt sich auch in eine grüne faserige Substanz um, und wie oben erwähnt, ist der Pyroxen hie und da der Umwandlung in Chlorit respective Delessit verfallen und eine Unterscheidung zwischen diesen Umwandlungsproducten lässt sich auf optischem Wege nicht durchführen.

Es ist wahr, in dem frischen oder umgewandelten Hisingerit sind fast immer Magnetkieskörner eingeschlossen, aber daraus ist durchaus nicht der Schluss zu ziehen, dass der Hisingerit aus Magnetkies entstanden sei.

In dem eisenführende Gesteinn von Blaafjeld ist das gediegene Eisen vorwiegend als feines Pulver verbreitet; da im Gestein auch Graphit in feinen Körnern auftritt, ist ersteres von letzterem nur durch Behandlung des Präparates mit einer neutralen $CuSO_4$-Lösung sicher zu unterscheiden. Selten sind grössere Stücke von ged. Eisen wahrzunehmen und in diesem Falle zeigt das ged. Eisen deutliche Widmannstätten'sche Figuren

und verhält sich structurell wie eine Zwischenklemmungsmasse d. h. das ged. Eisen spielt dieselbe Rolle wie in den Chondriten.

Bemerkenswert ist es, dass das ged. Eisen stets vom Hisingerit und Magnetkies begleitet wird. Letzterer tritt in den Basalten von Blaafjeld verhältnissmässig spärlich und in Form kleiner homogener Körner auf. Wo er reichlich vorhanden ist, zeigt er sich auch als Zwischenklemmungsmasse, so dass der Hisingerit, der Magnetkies und das ged. Eisen im Aufbau dieser Basalte strukturell die gleiche Stellung einnehmen; Törnebohm betrachtet diese drei Substanzen als dem ursprünglichen Bestande des Gesteines fremd[1]); um dies zu begründen hebt er hervor, «dass das Ausfüllungssilicat (der Hisingerit) kleine Hohlräume in der Zwischenklemmungsmasse ausfüllen kann, und ferner, «dass die Ausfüllungsmineralien (Hisingerit, Magnetkies und Eisen) nicht durch einen Zersetzungsprocess der normalen Bestandtheile des Dolerits entstanden sein können, da ja diese noch fast vollständig unverändert sind.»

Da andere Thatsachen zu Gunsten dieser Betrachtung fehlen, habe ich solche Stellen gesucht, aber keine gefunden. An denjenigen Stellen, wo der Hisingerit oder die Basis umgewandelt worden sind, verwischt sich die Grenze, wie Törnebohm selbst sagt, und es ist nicht mehr möglich festzustellen, ob die Zersetzungsproducte aus dem Hisingerit oder aus der Basis herrühren, geschweige denn daraus mit Sicherheit schlissen zu können, dass der Hisingerit ein Eindringling sei.

Auch zahlreiche Ilmenitleisten sind im Gestein vorhanden. Die unregelmässigen kleinen Partien oder Körner, welche ihrer Farbe nach im reflektirten Licht als Magnetit zu bestimmen wären, bleiben die meisten bei der Behandlung des Präparates mit *HCl* ungelöst. Die chemische Zusammensetzung des eisenführenden Dolerits von Uifak ergibt sich aus den folgenden Ana-

[1]) Die eisenführ. Gest. v. Ovifak u. Assuk. S. 7.

lysen. Meine Analyse (4) zeigt weniger SiO_2 als diejenigen des Prof. Law. Smith (1 und 2) und Nauckhoff's (3).

	1	2	3 [1])	4	
SiO_2	48,02	49,02	49,18	47,11	
TiO_2	—	—	0,52	0,78	
Al_2O_3	15,06	13,11	13,52	14,33	
Fe_2O_3	6,50	5,03	5,52	4,88	
FeO	9,45	11,20	10,31	11,06	
MnO	0,12	0,20	0,28	0,21	$= Mn_3O_4$
MgO	8,62	8,16	6,83	8,45	
CaO	9,52	10,10	11,51	9,12	
Na_2O.	1,50	1,33	1,84	1,91	
K_2O	0,73	0,35	0,06	0,20	
Ph	0,06	—	0,13	0,29	$= P_2O_5$
H_2O	—	1,80	0,34	1,52	
Cl.	—	—	Spur	0,09	
S	—	—	—	0,53	
	99,58	100,30	100,04	100,58	

Der Basaltrücken von Blaafjeld in der Nähe des Meeres unterscheidet sich von dem oben beschriebenen durch eine hellere Farbe und eine ausgezeichnet porphyrische Structur. Die sehr fein körnige, fast dichte Grundmasse enthält Einsprenglinge von Plagioklas, der in frischen Tafeln nach $M\{010\}$ auftritt und zahlreiche Pseudomorphosen von Bol nach Augit. Hier ist sowohl der Plagioklas als auch der Augit in zwei deutlichen Generationen entwickelt. Die Plagioklaseinsprenglinge gehören dem Bytownit an.

Neben den grossen Pyroxeneinsprenglingen, die in Bol umgewandelt sind, kommen vollkommen idiomorphe Angitkrystalle vor, die etwas blassere Farbe als jene des doleritischen Basaltes haben.

[1]) Die Analyse 3 giebt die Zusammensetzung des Dolerits mit prismatischer Absonderung von Godhavn.

An einigen Stellen wurden auch Einsprenglinge von Hornblende beobachtet, welche dieselbe magmatische Resorption erlitten haben, wie man sie in Andesiten so oft findet.

Die Grundmasse besteht aus Plagioklasmikrolithen, die nach ihrer Auslöschungsschiefe und nach ihrem Brechungsvermögen im Vergleich zu demjenigen des Canadabalsams dem Labradorit angehören, und aus Augitkörnern. Winzige Magnetitkörner sind reichlich vorhanden, aber ged. Eisen konnte durch $CuSO_4$-lösung nicht nachgewiesen werden.

Graphit- und Spinellführende Anorthiteinschlüsse.

Sowohl der Basalt von Blaafjeld als auch die anderen eisenführenden Gesteine der Insel Disko [Nûk Vaigat, Jernpynten, Assuk] enthalten wallnuss- oder haselnussgrosse, zuweilen auch grössere scharf begrenzte Klumpen eines Plagioklases, dessen nach *M* tafelförmige Individuen weit grösser und dessen Zwillingslamellen breiter sind als diejenigen des Dolerits von Uifak. Diese Plagioklasklumpen sind mit Graphitstaub und Schuppen so dicht gespickt, dass sie makroskropisch bei nahe den Eindruck von Graphitklumpen machen. Auch beherbergen sie unzählige braune Glaseinschlüsse, die nach der Zwillingsebene der Plagioklaslamellen so verlängert sind, dass sie als Stäbchen erscheinen. Diese Glaseinschlüsse sind meist nach geraden Linien geordnet, und am Rande jeder Zwillingslamelle treten sie viel spärlicher auf, als in der Mitte derselben.

In diesen graphitreichen Plagioklasklumpen gewahrt man bald mehr bald weniger violettlich rothe isotrope Körner, die Nauckhoff, Törnebohm und Lorenzen als Spinell betrachten, während Prof. Lawrence Smith sie als Korund bestimmte.

Der Plagioklas dieser Knollen wurde von Törnebohm als Anorthit bestimmt[1]) und die betreffenden Partien als Anorthitfels

[1]) Die eisenführ. Gest. v. Ovifak u. Assuk. S. 14.

bezeichnet. Prof. Law. Smith und K. J. V. Steenstrup auf Grund der Beobachtung, dass das Pulver dieses Plagioklases nach 40stündiger Behandlung mit *HCl* keine gallertartige Kieselsäure gibt und das Filtrat sehr wenig oder gar kein *Ca* enthält, bestimmen das Mineral als Labradorit[1]). Dagegen gibt Joh. Lorenzen an, dass der fragliche Plagioklas in *HCl* leicht löslich ist, und zieht daraus den Schluss, dass das Mineral Anorthit ist[2]).

Angesichts dieser Widersprüche sehe ich mich veranlasst die Resultate meiner optischen und chemischen Untersuchung mitzutheilen.

Beim Prüfen der Auflöschungsschiefe in Spaltblättchen nach $P\{001\}$ wurde gemessen: 29° 30′, 30° 15′, 30° 30′.

Ein Spaltblättchen nach $M\{010\}$ wurde auf beiden Flächen untersucht; auf der einen gab es 35° 15′, auf der anderen 34° 35′, was auf eine Zusammenzetzung $Ab_1 An_{12}$ deutet. Die Spaltblättchen nach $M\{010\}$ zeigten im conv. Licht den Austritt einer Axe am Rande des Gesichtsfeldes. Folglich ist der betreffende Plagioklas ein saurer Anorthit. Dieses Resultat wird auch durch das Maximum von 51° 30′—52° in den zu *M* senkrechten Schnitten bestätigt.

Nach Entfernung des grössten Theils des Graphits durch wiederholtes Abschwemmen und nach 24 stündiger Behandlung des feinen Pulvers mit verd. *HCl* (2 : 1) bekam ich gallertartige Kieselsäure und im Filtrat wurde neben *Mg* auch *Ca* gefunden. Wenn das Pulver nicht allzufein und vom Graphit nicht befreit war, so erhielt ich nach 48 stündigem Angriff mit *HCl* nur sehr wenig Gallerte und im Filtrat nur Spuren von *Ca*. Eine Controle durch die Bestimmung des sp. Gewichts ist leider wegen der unzähligen Glas- und Graphiteinschlüsse ausgeschlossen.

---

[1]) Mémoire sur le fer natif du Grönland et sur la Dolérite qui la renferme. p. 26.

[2]) A chemical Examination of Greenland tellurie iron pag. 23.

Die rothen isotropen Körner besitzen keine deutliche krystallographische Begrenzung. Auf Grund einer Analyse bestimmte sie Prof. Law. Smith als Korund, allein anstatt zu bemerken, dass die optischen Eigenschaften der Substanz mit denjenigen des Korunds unverträglich sind, fügt er hinzu: quoique les observations optiques ne soint pas certaines [1]).

Die Körner dieser Substanz wurden nach Entfernung des Graphits durch Glühen des Anorthitknollenpulvers (ohne Anwendung von Sauerstoff) mittels HFl getrennt.

Das specif. Gewicht wurde mit dem Pyknometer bei 18° 5 C. zu 3·732 gefunden. Die Substanz ritzt den Quarz.

Für die Analyse wurden die Körner im Stahlmörser pulverisirt und darauf das Eisen durch HCl entfernt.

Unter 3 theile ich die Analyse der isolirten Substanz und zum Vergleich diejenige von Prof. Law. Smith unter 1, und Dr Joh. Lorenzen (2) mit

	1	2	3 [2])
SiO_2	0,95	0,20	0,46
Al_2O_3	92,02	. . . . .	74,95
Fe_2O_3 }	3,25	80,60	3,03
FeO }		. . . . .	4,43
Cr_2O_3		1,24	0,91
MgO	2,68	19.11	17,83
	98,90	101,15	101,61

Wie man sieht, steht die Analyse 3 der Analyse 2 nahe und beide ergeben die Zusammensetzung eines chromhaltigen Spinells, was mit allen physikalischen Eigenschaften der Sub-

---

[1]) Mémoire sur le fer natif du Grönland et sur la Dolérite qui le renferme. p. 34.

[2]) Für diese Analyse wurde die Substanz mit B_2O_3 aufgeschlossen (Siehe Prof. Dr Iannasch. Leitfaden der Gewichtsanalyse S. 197. Für eine andere Analyse habe ich mit $KHSO_4$ aufgeschlossen und folgendes gefunden: SiO_2 = 0,54, Al_2O_3 = 76,09, Cr_2O_3 = 1,01, MgO = 16,63, Fe_2O_3. FeO wurden nur ein mal bestimmt.

stanz übereinstimmt, während Prof. Law. Smith's Analyse aus der Reihe springt, und der optischen Beobachtung widerspricht.

Wenn man die kohlige Substanz der Anorthitklumpen mit rother rauchender Salpetersäure befeuchtet und dann stark glüht, bläht sie sich nicht auf, was nach Luzi auf Graphitit deuten würde [1]).

Bemerkenswert ist es, dass die kohlige Substanz stickstoffhaltig ist, da sie durch Erhitzen mit metallischem Kalium, Lösen der Schmelze im Wasser, Zugabe von $NaOH$, einigen Tropfen $FeSO_4$ und $FeCl_3$, Aufkochen und Übersättigen mit HCl Berlinerblau erzeugt [2])

Krystallographische Begrenzung wurde an der kohligen Substanz nicht wahrgenommen.

Die chemische Zusammensetzung der Anorthitklumpen ist durch die Analysen 1 (Nauckhoff), 2 (Smith), 3 (Lorenzen) [3]) gegeben und zeigt im Vergleich mit dem eisenführenden Basalt von Uifak eine viel basischeren und durchaus abweichenden Character.

	1				2	3
	I	II	III	IV		
SiO . . .	34,72	37,92	44,94	36,59	34,16	39,75
Al_2O_3 . .	31,83	32,36	22,20	19,18	33,85	26,08
Cr_2O_3 . .	—	0,08	—	—	—	1,23
Fe_2O_3 . .	4,88	—	—	—	—	12,33
FeO . . .	5,53	4,02	9,45	14,85	17,00	—
CaO . . .	10,19	11,57	11,01	8,73	8,80	12,01
MgO. . .	9,35	2,86	4,98	7,24	4,23	4,51
C	0,53	6,90	3,35	2,55	—	—

Auch das Verhältniss der Kieselsäure zur Thonerde wechselt von 1,0086 (Analyse 2) bis zu 2,02 (Analyse 1. III) ab.

---

[1]) V. v. Richter's Lehrbuch der anorganischen Chemie. S. 172.

[2]) Prof. Dr A. Bernthsen, Kurzes Lehrbuch der organischen Chemie. S. 3.

[3]) A chemical Examination p. 36.

Törnebohm[1]) erkennt, dass die Entstehung dieser Anorthitklumpen schwer zu erklären ist, aber er fügt hinzu: «vielleicht können sie doch dahin gedeutet werden, dass bei der Eruption der basaltischen Gesteine Stücke von irgend einem Kalk- und thonerdehaltigen bituminösen Gestein z. B. von bituminösem Mergel oder Mergelschiefer in das feuerflüssige Magma eingeschlossen worden sein; hier sind sie geschmolzen und nachdem sie durch die fliessende Bewegung der Masse mehr oder weniger innig mit ihr vermengt worden, haben sie schliesslich bei der Abkühlung und Erstarrung derselben ihre gegenwärtige krystallinische Ausbildungsform angenommen.»

Hier wäre am Platze zu erwähnen, dass in den eisenführenden Basalten von Blaafjeld hie und da grosse Plagioklaskrystalle mit Schalenbau zuweilen auch mit rückläufiger Recurrenz auftreten, deren Kern auf der Fläche *M* eine Auslöschungsschiefe von 35° zeigt, sodann folgt eine Mittelschale mit 29° 30' —30° und die äusserste Haut mit 27° d. h. der Kern dieser Krystalle mit zonarer Structur hat denselben Grad von Basicität, wie der Plagioklas der Spinell- und Graphitführenden Knollen sie zeigt. Dieser Umstand legt es nahe die Möglichkeit einer Ausscheidung dieser Anorthitknollen aus dem Magma nicht von vornherein und grundsätzlich von der Hand zu weisen, wenn schon die Erklärung Törnebohms hohen Grad von Wahrscheinlichkeit hat. Ein sicherer Beweis für ihre Richtigkeit wäre nur dann zu liefern wenn die chemische Zusammensetzung der mit dem Basalte zusammen auftretenden mergelig-thonigen Sedimente bekannt wäre.

Das eisenführende Gestein von Assuk

hat sich sehr frisch erhalten und zeigt deutliche fluidale und schwach ausgeprägte porphyrische Structur, da in einer ganz dichten fleckigen Grundmasse spärliche und kleine Einsprenge-

[1]) Die eisenführ. Gesteine v. Ovifak u. Assuk. S. 16.

linge eines dunkelgrünen Minerals stecken, dessen Längsschnitte den charakteristischen Umriss der rhombischen Pyroxene erkennen lassen.

K. J. V. Steenstrup betrachtet die betreffenden Einsprenglinge als Olivin.

Bei näherer Untersuchung kann man wahrnehmen, dass sie gute Spaltbarkeit besitzen, und von HCl und H_2SO_4 nicht angegriffen werden. Optisch verhalten sie sich stark lichtbrechend, aber schwach doppelbrechend. Bei einem Spaltblättchen, welches im conv. Licht das Interferenzbild der optischen Normale zeigte, ergab sich die Stärke der Doppelbrechung = 0·0097. Wenn die Längsrichtung c ist, dann ist $c = c$. Spaltwinkel = 88° 42′. Die Krystalle sind rundum ausgebildet, aber es ist mir nicht gelungen ein Individuum zu isoliren um eine krystallographische Bestimmung der Flächen durchzuführen.

Daraus ist es leicht ersichtlich, das die Einsprenglinge des Gesteines nicht dem Olivin angehören, sondern einem rhombischen Pyroxen. Der fehlende Pleochroismus und die helle Farbe deuten auf Enstatit oder Bronzit.

Mit blossem Auge kann man nur hie und da auf frischen Bruchflächen kleine Eisenklumpen oder Splitter, öfter kleine Partien von Magnetkies sehen und viel spärlicher tritt der Hisingerit in winzigen Körnern auf.

An einigen Stellen kommen auch grosse Krystalle vor, deren unregelmässige rechteckige Schnitte 16^{mm} Länge auf 8^{mm} Breite erreichen. Das Mineral hat braune Farbe und auf den runzeligen Bruchflächen schwachen Fettglanz. Die Härte der Minerals ist 7. Sein Pulver ist hell okergelb und gibt Wasser beim Erhitzen in Glührörchen. Von HCl wird es nur theilweise angegriffen. Die Lösung enthielt neben SiO_2 viel Al_2O_3, Fe_2O_3, CaO und weniger MgO nebst Spuren von MnO. Das specifische Gewicht von 2,612, die theilweise Angreifbarkeit mit HCl und der Gehalt an Al_2O_3 in der Lösung liessen, unter der

Annahme, dass die Substanz homogen sei, an Cordierit oder harten Fahlunit denken. Ein Präparat lies erkennen, dass die Substanz aus zahlreichen Körnern bestand, die alle Eigenschaften des Quarzes hatten, und die Bruchstücke eines einziges grossen Individuums zu sein schienen, welche durch eine bräunliche gelbe isotrope Substanz, die auch das ganze Individuum einhüllte, wieder verkittet waren. Nach Entfernung dieser Substanz durch *HCl* wurden die zurückbleibenden farblosen Körnchen durch *HFl* fast vollständig verflüchtigt. 0,186 gr. liessen 0,002 gr. Rückstand. Es liegen danach fremde Einschlüsse von Quarzindividuen vor, welche durch die Wärme des Magmas zersprengt und dann wieder durch die umhüllende Substanz verkittet wurden.

U. d. M. zeigt das eisenführende Gestein von Assuk gut ausgeprägte Fluidalstructur und besteht aus Plagioklasmikrolithen und schmalen Säulchen eines fast bis ganz farblosen Pyroxens, die zusammen eine pilotaxitische Grundmasse bilden.

Die betreffenden Pyroxenleisten besitzen 1 oder 2 Quersprünge und zeigen zuweilen ein terminales Flächenpaar. Deutliche Längsspaltrisse sind nur selten wahrzunehmen und in diesem Falle sind sie nur an den Enden sichtbar. Überall, wo ich es prüfte, ist die Längsrichtung Axe kleinster Elasticität. Alle Eigenschaften stimmen mit denjenigen des Enstatits überein und das fragliche Mineral wurde auch von Törnebohm[1]) als solcher bestimmt. Mit diesen kommen zusammen bald reichlicher bald spärlicher Mikrolithe von Augit vor.

Der Schnitt eines oben beschriebenen Einsprenglings von rhombischem Pyroxen zeigt keinen Unterschied bezüglich der Pyroxenleisten der Grundmasse.

Der Plagioklas tritt gewöhnlich in sehr feinen, aus zwei Lamellen bestehenden Leisten auf. Die meisten derselben, die bei 45° von den Nicolshauptschnitten als ein einziges Individuum

[1]) Die eisenführ. Gest. v. Ovitak u. Assuk. S. 19.

erschienen, zeigten folgende Auslöschungsschiefe: 20° — 23°, 23°—24° 30'. Ein Maximum von 25° und 26° wurde auch beobachtet. Danach wäre der Plagioklas als Labradorit zu bestimmen. An manchen Stellen habe ich Leisten beobachtet deren Auslöschungsschiefen den charakteristischen Punkten [1]) des Oligoklases entsprechen. Andesinleisten scheinen auch vorhanden sein.

Lange aber ausserordentlich feine Rutilnädelchen sind zwischen den Gemengtheilen der Grundmasse auch zu gewahren.

In dieser frischen pilotaxitischen Grundmasse befindet sich auch das ged. Eisen, bald als eckige Stücke, bald als Klumpen, die nach der Richtung der Fluidalstructur verlängert sind; einige derselben sind hinter einander gereiht und markieren so die Fluidalrichtung.

Die geschliffenen Flächen des ged. Eisens zeigen feine glänzende sich schneidende Linien. Zuweilen scheint die ganze Masse dieser Eisenklumpen vollkommen homogen zu sein und in unmittelbarer Berührung mit den Gemengtheilen der Grundmasse zu stehen, die um die Eisenkörner annähernd tangential angeordnet sind. Öfter zeigen die Eisenklumpen am Rande eine feine schwarze oder braune Haut von Magneteisen, respective Eisenhydroxyd. Unter letzteren Bedingungen hat Prof. A. Sauer [2]) ein Stück ged. Eisens in dem Basalt des Ascherhübels bei Tharand in Sachsen gefunden. Häufig sind die Eisenklumpen rundum bekleidet mit isotropem Hisingerit, der an gewissen Punkten in die grüne doppelbrechende Substanz umgewandelt ist. Auch Magnetkies wurde sehr oft an der Oberfläche, nie aber im Innern derselben beobachtet.

Wo die Eisenklumpen von schwarzen Streifen durchzogen sind, lässt sich fast immer leicht erkennen, dass solche Klumpen wenigstens aus zwei zusammengeklebten Körnern herrühren. Um die Eisenklumpen herum enthält das Gestein wenig Eisen-

[1]) Michel Lévy. Determination des Feldspath.

[2]) Erläuterungen zur geolog. Specialkarte des Königreiches Sachsen 1891. S. 81.

erze und macht den Eindruck, als ob eine Concentration des Eisengehaltes des Magmas in diesen Klumpen von ged. Eisen statgefunden hätte.

Die chemische Zusammensetzung des Gesteines ist nur durch die Analyse von Prof. Law. Smith gegeben.

SiO_2	54,80
Al_2O_3	13,40
FeO	14,02
CaO	7,84
MgO	5,33
$Na_2O + K_2O$	2,18
Ni	0,08
Co	Spur
H_2O	1,50
	99,15

Angesichts des hohen SiO_2-gehaltes [und Törnebohm gibt nach einer Bestimmung von Herrn G. Lindström 56 % SiO_2 [1]) an], könnte man das Gestein kaum in die Reihe der Basalte stellen, sondern viel mehr in die Familie der Andesite und ins besonders der Hypersthenandesite; dafür würde auch die Structur sprechen.

Das eisenführende Gestein von Jernpynten

besitzt die äusseren Charaktere des Gesteines von Assuk.

Die mikroskopische Untersuchung zeigt eine deutliche porphyrische oder Intersertalstructur.

Die graphitfreie, bald pilotaxitische bald hyalopilitische Grundmasse enthält meist unilamellare Labradoritmikrolite mit deutlicher Fluidalanordnung und ein Gemenge von Augitkörnern

[1]) Die eisenführ. Gest. S. 21.

mit Enstatitleisten. Eisenerze, Basis und isotroper Hisingerit treten nur spärlich auf.

In der Grundmasse sieht man rundliche stahlgraue und vollkommen homogene Partien von ged. Eisen, die hier wieder in der Fluidalrichtung verlängert sind, und mit einer dünnen Haut bald von Magneteisen, bald von Eisenhydroxyd, zuweilen von Hisingerit überzogen sind. Hie und da liegen die Eisenpartien in unmittelbarer Berührung mit den Gemengtheilen der Grundmasse. In der Grundmasse kommen spärliche aber grosse Bytowniteinsprenglinge oder zuweilen grosse Plagioklaskrystalle mit zonarer Structur vor, deren Kern aus Bytownit und deren äussere Schale aus Labradorit besteht. Die Mehrzahl dieser Plagioklaseinsprenglinge sind mit Graphitstaub gespickt. Die meisten Einsprenglinge gehören dem Enstatit an, während der monokline Pyroxen als Einsprengling ganz untergeordnet auftritt, sodass letzterer in der Grundmasse, ersterer unter den Einsprenglingen vorwaltet. Wie daraus leicht ersichtlich, schliesst sich durch den rhombischen Pyroxen, den Plagioklas der Grundmasse, die Structur und das äussere Aussehen das Gestein von Jernpynten an dasjenige von Assuk an, während es durch die Plagioklaseinsprenglinge und den reichlicheren monoklinen Pyroxen mit dem Basalt von Uifak zusammenhängt.

Das eisenführende Gestein von Ivigsarkut sieht sehr ähnlich demjenigen von Jernpynten, nur dass der rhombische Pyroxen sowohl in der Grundmasse wie auch als Einsprengling seltener ist und während das Gestein von Jernpynten sich sehr nahe demjenigen von Assuk anschliesst scheint diese Verwandtschaft weniger nahe bei dem Gestein von Ivigsarkut. Wie gering der Unterschied der Gesteine von Jernpynten (506) und von Ivigsarkut (474) untereinander und von dem Gestein von Assuk in Wirklichkeit ist, lassen die folgenden von Herrn Dr. Dittrich ausgeführten Analysen und ihre Vergleichung mit der Analyse des Assuk-Gesteins (S. 241) erkennen.

	506	474
SiO_2	58,91	59,03
TiO_2	1,23	1,19
Al_2O_3	13,43	13,16
Fe_2O_3	fehlt	fehlt
FeO	7,15	7,02
MgO	5,63	5,50
CaO	6,68	6,75
Na_2O	2,91	2,47
K_2O	1,31	1,43
P_2O_5	0,15	0,13
H_2O	1,48	2,86
CO_2	1,35	0,25
	100,23	99,79

Der andesitische Charakter dieser Gesteine ist augenscheinlich [1]).

[1]) Die chemische Stellung dieser Gesteine wird am deutlichsten erkennt, wenn man sich ihre Kerne berechnet. Dieselben ergeben für das Gestein von Ivigsarkut die unter I folgenden Verhältnisse, während II dieselben Angaben für den Hypersthendiorit von Ivrea (cfr. H Rosenbusch, Elemente der Gesteinslehre S. 186), liefert.

	I %	II %
$(NaK)AlSi_2$	25,6	29,2
$CaAl_2Si_4$	30,8	27,7
RSi	32,8	30,6
Si	10,8	12,5
	100,0	100,0
$A.$-$Z.$	465	467
$M.$-$A.$-$Z.$	179	178

Dagegen besteht der Uifaker Dolerit nach der ersten oben S. 232 angeführten Analyse aus den Kernen unter I, womit man vergleichen wolle die aus Gabbro von Radauthal berechneten Kerne sub II.

	I %	II %
$(NaK)AlSi_2$	14,8	18,0
$CaAl_2Si_4$	45,9	48,7
RSi	39,3	33,3
	100,0	100,0
$A.$-$Z.$	448	449
$M.$-$A.$-$Z.$	176	175

Die übrigen eisenführenden Gesteine der Insel Disko zu beschreiben, liegt nicht im Plan dieser Studie, da sie dem einen oder dem anderen von den beschriebenen Typen vollkommen ähnlich sind.

In den verschiedenen Gesteinen der Insel Disko kommen Gänge vor, deren Studium dadurch von Interesse zu sein scheint, dass die Verwandschaft der betreffenden Gesteine sich ersichtlich macht; so zeigt z. B. ein Basaltgang von Assuk dieselhe ophitische Structur wie das eisenführende Gestein von Uifak, nur dass die Gemengtheile etwas feinkörniger sind.

Der Pyroxen in zwei Generationen ist stark umgewandelt in Carbonate und Pistazit, während aus dem Ilmenit Leukoxen entstanden ist.

Die Basaltgänge von Nûk, Kiterdlek und von Sinigfik auf der südlichen Seite der Insel Disko zeigen eine noch gröbere ophitische Structur als der Dolerit von Uifak. Im Gange von Sinigfik ist der Plagioklas basischer als Ab_3An_7, da die Auflöschungsschiefe auf $\infty P \breve{\infty} \{010\}$ 32° 30′ erreicht und im conv. Licht eine Axe am Rande des Gesichtsfeldes austritt.

Der monokline Pyroxen zeigt zwei Generationen, aber derjenige, welcher der ersten Generation angehört, ist ebenfalls in Carbonate umgewandelt.

Wie man sieht, bilden die eisenführenden Gesteine der Insel Disko eine continuirliche Reihe, deren eines Endglied — das Gestein von Assuk sich an die Andesite anschliesst, während das andere Endglied — das Gestein von Uifak die gut ausgeprägten Eigenschaften der Basalte besitzt, und beide Endglieder durch gewisse Zwischenformen verbunden scheinen.

Da zur Zeit der meteorische Ursprung des gediegenen Eisens wohl kaum noch Vertheidiger finden dürfte, so bleibt die Frage, ob dasselbe als solches aus der Tiefe der Erde emporgestiegen ist, und dem Magma selbst angehört, oder als Reductionsproduct betrachtet werden muss.

Die Thatsache, dass die eisenführenden Gesteine mit den reichlich Kohle-haltigen Sedimentärformationen in Berührung stehen und dieselben durchsetzt haben, legt die Vermuthung nahe, dass das ged. Eisen wohl ein Reductionsproduct sei. Ich muss gestehen, dass ich solcher Meinung war, als ich die Untersuchung der eisenführenden Gesteine begann, und dass ich hoffte sichere Beweise zur Unterstützung dieser Ansicht zu finden.

Zuerst ist in Betracht zu ziehen, dass, wenn das ged. Eisen durch einen Reductionsproces entstanden ist, dieses geschehen konnte, entweder durch die Reduction fremder Eisensalze, die sich in den Hohlräumen des Gesteines absetzen konnten, oder durch die Reduction der eisenhaltigen Gemengteile des Gesteines selbst und dann natürlich in erster Linie der Eisenerze; endlich konnte beiden Vorgänge neben einander hergehen.

A. E. Törnebohm[1]) theilt die erste Meinung, indem er sagt: «dass bituminose Stoffe vom Mergel ausdestillirt und sich in den Poren des erstarrenden Gesteines gesammelt hätten. Wenn diese nachher von eisenhaltigen Lösungen durchdrungen wurden, so wäre es wohl erklärlich, dass sich metallisches Eisen habe herausreduciren können.» Eine solche Entstehungsart des ged. Eisens ist gewiss an und für sich möglich; doch erhebt sich dagegen ein gewichtiger Einwand. Wenn nämlich das gediegene Eisen durch die Reduction von, den Gemengteilen des Gesteines fremden, Eisensalzen entstanden wäre, so müsste die Summe von $Fe_2O_3 + FeO + Fe$ Schwankungen zeigen, aber aus den Analysen ergibt sich, dass dies durchaus nicht der Fall ist, denn die betreffende Summe z. B. im Basalt von Uifak ist ganz konstant = 15,94, 16,23, 15,59, 15,86.

Aus demselben Grund muss man den Eisengehalt des Magnetkieses und des Hisingerit nicht als fremd den ursprünglichen Bestandtheilen des Gesteines betrachten, was jedoch die secundäre Bildung der betreffenden Mineralien nicht ausschliesst.

---

[1]) Die eisenführ. Gest. v. Ovifak u. Assuk. S. 37.

Sehr lehrreich ist der vom Prof. Law. Smith[1]) angeführte Versuch, dass Daubrée durch Schmelzen des Lherzolithpulvers in einem mit Kohlenstaub ausgefütterten Tiegel ein Eisen darstellte, dessen Zusammensetzung sehr wenig von derjenigen des ged. Eisens von Uifak abweicht. Ein solcher Versuch spricht dafür, dass zur Entstehung des Eisens der eigentliche Bestand des Gesteines genügte.

Aus dem oben Erwähnten geht hervor, dass der Ursprung des ged. Eisens nur entweder in der Reduction der eigentlichen Gemengtheile des Gesteines oder in dem Emporsteigen desselben aus der Tiefe der Erde zu suchen ist. Der Schlüssel zur Lösung dieser Frage scheint nicht in der Untersuchung der grossen losen Blöcke von gediegenem Eisen zu liegen, da wie oben wiederholt erwähnt, wo grössere Eisenpartien in den Gesteinen vorkommen, dieselben aus dem Zusammenballen zweier oder mehrerer Körner herrühren (so dass die grossen Blöcke wohl eine complicirtes Phänomen darstellen). Auch ist daran zu erinnern, dass die betreffenden Blöcke, wie Prof. Law. Smith beobachtede[2]) starke Verwitterungsprocesse zeigen.

Die frischen aus Gemengtheilen von geringem Korn bestehenden Gesteine von Assuk und Jernpynten haben das Eisen am besten erhalten und verdienen daher den Vorzug bei einer Untersuchung über den Ursprung des basaltischen ged. Eisens von Grönland, ob in denselben gewisse Hinweise für die eine oder für die anderer Entstehungsart des Eisens vorliegen.

Ich habe zu erforschen gesucht, ob im Innern der Eisenpartien Reste von Magneteisen oder Ilmenit zu gewahren seien; aber keine derartige Spur beobachtet; im Gegentheil ist das gediegene Eisen stets von Magnetkies, Magneteisen und Hisingerit überzogen.

Dr Joh. Lorenzen untersuchte, ob der mit dem ged.

---

[1]) Mémoire sur le fer natif du Groenland et sur la Dolérite qui le renferme. pag. 51.

[2]) Ibid. pag. 9.

Eisen in Berührung stehende Basalt von Blaafjeld nicht etwa weniger verbundenes Eisen enthielte, als derjenige, welcher in gewisser Entfernung von den Eisenblöcken sich finde, über das Resultat berichtet er mit den Worten[1]: «It appears that all the specimens tested contained the same quantity of iron as is usually found in basalt. Although there is a litlle difference in a few of them, it is too slight to decide anything.»

Der stickstoffhaltige Graphit der Anorthitknollen kann ebenfalls nicht als ein zwingender Beweis für die Entstehung des Eisens durch Reduction betrachtet werden, da einerseits dasselbe auch dort in den Gesteinen vorkommt, wo keine derartigen Anorthiteinschlüsse sich zeigen, und andererseits zur Zeit nicht nachgewiesen ist, dass der unabhängig von den Anorthitklumpen das Eisen begleitende Graphit auch stickstoffhaltig ist.

Auch ist es bemerkenswert, dass das Nickel und der Kobalt in den basischen Eruptivgesteinen im Olivin enthalten zu sein pflegen, und dass die eisenführenden Gesteine von Grönland gerade olivinarm oder olivinfrei sind, und zweitens dass dass der TiO_2-gehalt, welcher in dem Gestein von Uifak im Ilmenit und Augit enthalten ist, in dem an ged. Eisen reichen Gestein von Assuk sich in langen Rutilnädelchen abgeschieden hat, was man nicht etwa auf einen orogenetischen Druck zurückführen kann, da das betreffende Gestein keinerlei dynamometamorphe Beeinflussung zeigt.

Wie ersichtlich, entbehrt die Hypothese von der Reduction, die an und für sich sehr willkommen wäre, jeglichen strengen Beweises, und wenn man sie trotzdem annehmen will, so würde sie nur die Anwesenheit des Eisens, nicht auch die übrigen Erscheinungen erklären.

Betrachtet man das Eisen als ursprünglich im Magma enthalten und als solches aus der Tiefe emporgestiegen, dann ist es ein Gemengtheil der Gesteine und in Folge seiner leichten

[1]) A chemical Examination of Greenland telluric iron pag. 38.

Schmelzbarkeit musste die Erstarrung desselben zuletzt geschehen und sein Auftreten als Zwischenklemmungsmasse, als verlängerte, eckige oder rundliche, theils mit einer Magneteisenhülle überzogene, theils davon freie Klumpen leicht erklärlich.

Die Thatsache, das der Magnetkies[1]) und der Hisingerit fast immer das gediegene Eisen begleiten, und zwar so, dass diese Substanzen das Eisen stets umhüllen, würde dadurch vollkommen erklärt, dass der Magnetkies aus dem Eisen durch pneumatolytische Wirkungen[2]) entstanden sei, und der Hisingerit entweder zur gleichen Zeit oder während der thermalen Periode sich bildete.

Nur auf diese Art und Weise ist der von den ursprünglichen Bestandtheilen des Gesteines untrennbare Eisengehalt des Magnetkieses und des Hisingerits und gleichzeitig ihre secundäre Bildung und ihre chemische Zusammensetzung verständlich.

Betrachtet man den Magnetkies und den Hisingerit als aus dem gediegenen Eisen enstanden, so erscheinen die eisenführenden Gesteine ähnlich wie die Pallasite und Chondrite und die meteorischen Charaktere, deretwegen das grönändische gediegene Eisen von mehreren Forschern für meteorisch gehalten wurde, haben Nichts befremdliches.

Den 23. Februar 1900.

Mineralogisch-geologisches Institut der Universität Heidelberg.

---

[1]) Auch das in dem Basalt von Ascherhübel gefundene Eisenstück wird von Magnetkies begleitet. Siehe Erläuterungen zur geol. Specialkarte des Königreichs Sachsen Section Tharand von A. Sauer. S. 81.

[2]) In einem Stück von Dolerit von Uifak wurden kleine Menge von S. nachgewiesen.

III.

Beretning

om

en Undersøgelsesrejse til Øen Disko

i Sommeren 1898.

Af

K. J. V. Steenstrup.

1900.

I Vinteren 1897—98 bestemte «Commissionen for Grønlands geologiske og geografiske Undersøgelse», at jeg i Sommeren 1898 skulde berejse Diskos Syd- og Nordøstkyst for at studere Isforholdene paa denne Ø, navnlig om der fandtes isfri Dale, der førte gjennem større Dele af Øen. — Til Ledsagere havde jeg Botanikeren Cand. mag. Morten Pedersen og Maleren Grev Harald Moltke.

Vi afrejste fra Kjøbenhavn den 7de Maj med den Kgl. Grønlandske Handels Barkskib «Thorvaldsen», Kapt. Jul. Jensen, og efter en lang Overrejse kom vi den 28de Juni til Godhavn.

Paa Overrejsen beskæftigede jeg mig, som tidligere, med Undersøgelser over Havvandets Farve[1]). Allerede i 1874 var jeg paa det Rene med, at den eneste betryggende Maade, hvorpaa man kunde iagttage denne, var ved at anvende en «Vandkikkert», det vil sige et langt Rør, der for den nedre Ende er lukket med en Glasplade og som under Observationen sænkes mere eller mindre dybt ned i Vandet alt efter Dagslysets Styrke. Derved udelukkes alt Sidelys, og den Farve, der ses gjennem Røret, hidrører altsaa kun fra det Lys, der er trængt gjennem Vandet. Herved opnaaes ogsaa, at man faar en jævn uforanderlig Farveflade at bestemme, der ikke, saaledes som naar man indskrænker sig til at iagttage Farven gjennem Aabninger,

[1]) Vid. Medd. fra den naturhist. Forening i Kbhvn. 1877—78 S. 209 og Meddelelser om Grønland. V. S. 4.

der ikke naa Vandfladen, er urolig og paavirket af Reflexer, Polarisation og andre uvedkommende Forhold[1]). Røret var c. 4 Meter langt og saaledes anbragt, at man bekvemt kunde sænke det fra Dækket og foretage Iagttagelserne saa ofte, man ønskede.

Til at bestemme Farven anvendte jeg i 1874—78 farvede Papstykker; men dels vare de klare Vandfarver og de matte malede Farver paa Papir hinanden for uensartede, og dels var der jo ogsaa Spring imellem de enkelte Papirstykkers Farve, saa nogen nøjagtig Bestemmelse af Farvenuancen var det umuligt at faa. Jeg besluttede da at anvende Professor Forels bekendte Farveskala; men ogsaa denne har jo den Fejl, at der er Spring i Nuancerne. Da kom jeg til at tænke paa, at det jo paa Observationsstedet ikke gjaldt om at sammenligne Vandets Farve med en bestemt Farveskala, det kunde gjøres bedre hjemme i Ro og Mag, det gjaldt kun om at finde et Middel til at fastholde den i Vandkikkerten sete Farvenuance, og dette søgte jeg saa at opnaa ved at kombinere forskjelligt farvede Glasstykker. Hos en Glarmester forskaffede jeg mig en Del saadanne, hvis Nuancer gik fra lyseblaa, gjennem blaagrøn og grøn til gul, og deraf blev skaaret rektangulære Stykker c. 6 Cm. lange og c. $2^1/_2$ Cm. brede, og disse mærkedes med fortløbende Nummere. Til en Begyndelse havde jeg en Mængde Glas, men

---

[1]) Den af Nordenskiöld (Expedition till Grönland 1870 S. 986), Hartz (Medd. om Grønland XV. S. 28), Vanhöffen (Drygalskis Grønlands-Expedition II. S. 319) o. fl. Andre omtalte brunlige Farvetone, Vandet skal have i Davis-Strædet, tror jeg saaledes er uegentlig. I det mindste er det sikkert, at der er stor Forskjel paa at se ud over eller ned i Vandet og saa paa at se igjennem det med Vandkikkert. Saaledes iagttoge vi den 10de Juni 1898 paa 59° 19′ N. B. og 50° 30′ V. L., i Mundingen af Davis-Strædet, at Vandets Farve, ved at se ud over det, var svag grønliggul, medens det, set i Vandkikkert, var rent grønt. Den førstnævnte Farve svarede nærmest til Ve 3, J. 2 paa Tv. 16 i Lacoutures Repertoire chromatique, medens den sidstnævnte var lig Ve 4, B. 1 paa Tv. 17 i samme Værk. Eller Forskjellen var som Mellemfarverne mellem X—XI og V—VI i Forels Skala.

under Undersøgelsernes Gang viste det sig, at 12—15 Stkr. var fuldstændig tilstrækkelig til at gjengive alle Vandets Farver. Hosstaaende Figur viser, hvorledes denne Bestemmelse foretoges: Et ligesidet Glasprisme var indfattet og forsynet med en Hylde, hvorpaa de farvede Glasstykker stilledes, og dette Prisme holdtes saaledes over Vandkikkertens øverste Ende, at Billedet af Glassenes Farve halverede det i Røret sete Billede. Ved nogen Øvelse var det nu let at finde de Glasstykker, der tilsammen gav den samme Farve som Vandet. De hver Gang anvendte Glasstykkers Nr. noteredes, og efter Hjemkomsten reproduceres nu uden Vanskelighed de Farver, Vandet paa de forskjellige Steder havde. Efterligner man disse Farver, helst i firkantede Glas, ved Hjælp af de af Professor Forel anvendte Væsker (Opløsninger af Svovlsurt Kobberilte-Ammoniak og Neutralt kromsurt Kali), kan man skaffe sig et samlet Billede af Vandets Farve, saaledes som denne under Rejsen viste sig paa de forskjellige Steder, saa at man ved Hjælp af de samtidigt tagne Planktonprøver kan blive sat i Stand til at bedømme, hvilken Indflydelse Planktonets Art og Mængde mulig har paa Farven.

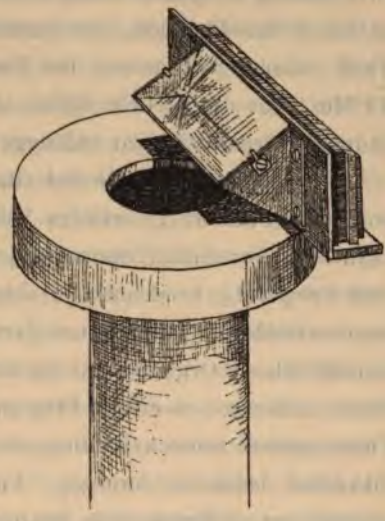

For at naa til en lige saa skarp Bestemmelse af Planktonets Art og Mængde, som jeg formentligen havde opnaaet ved Farvens Bestemmelse ved Hjælp af Glasstykkerne, anvendte jeg følgende Methode:

Samtidig med, at Farven iagttoges, toges en Vandprøve, og deraf filtreredes et vist Kvantum, som oftest en Liter, ved

Hjælp af en Sugepumpe, gjennem et Filter af hærdet Filtrerpapir. Filtrene anbragtes plant mellem to med en bred Krave forsynede Rør, i Lighed med de Filtre, der anvendes i Kemien til Filtrering af ganske smaa Væskemængder. Derved opnaaedes at faa al den Plankton, der fandtes i den paagældende Mængde Vand, samlet paa en saa lille Flade (Diameteren af Rørene var 12 Mm.), at der af hele Filtret bekvemt lod sig lave et mikroskopisk Præparat ved at indlægge det i Canadabalsam.

Da selvfølgelig baade det Glas, hvormed Vandprøven toges, som den Skilletragt, hvorfra Vandet lededes paa Filtret, udskylledes hver Gang, opnaaede jeg baade at erholde et absolut rent Præparat, hvad man jo aldrig kan være sikker paa, naar man anvender et Planktonnet flere Gange, og endvidere at jeg erholdt alle de Organismer, der fandtes i det filtrerede Kvantum Vand, samlede i et eneste Præparat, saa at saavel en alminde lig Undersøgelse som en Tælling af de enkelte Individer med stor Sikkerhed lader sig foretage. Da der her hverken er Tale om Afskrabning af Nettet eller Rystning bag efter, ligge Diatomekæderne ofte hele, enten som sammenslyngede Traade eller som «væltede Pengestabler».

Da det «hærdede» Filtrerpapir i betydelig Grad bliver gjennemsigtig ved Indlægningen i Canadabalsam, tror jeg ikke at Bestemmelsen af kjendte Arter vil være særlig vanskelig.

Vil man undgaa Filtrerpapiret, kan man i Stedet derfor filtrere Vandet gjennem en lille Kugle af Skydebomuld, der paa hensigtsmæssig Maade anbringes i et tyndt Glasrør i Skilletragten. Ved Bomuldens Opløsning i Eddikeæther og Dekantering faas Planktonet isoleret.

Denne Methode tror jeg vil have særlig Betydning ved Undersøgelsen af smaa Vandmængder, f. Ex. de, der ved Vandhenteren tages op fra store Dybder. Spørgsmaalet om, hvor dybt Plankton findes, og om Organismerne, særlig Diatomeerne, opløse sig under Nedsynkningen til Bunden, tror jeg næppe kan besvares paa en nøjagtigere Maade, end den her

anvendte; thi mulig Indblanding af Prøven ikke vedkommende Organismer er jo næsten udelukket, og paa den anden Side kan man omtrent sige, at hver eneste lille Organisme, der findes i Vandprøven, maa komme med i det mikroskopiske Præparat.

Hvad der er mere iøjnefaldende ved denne «mikroskopiske» Indsamling af Plankton end ved den almindelige, er den Rolle Urenlighederne spille. Ved Urenligheder forstaaes jo væsentligst ubestemmelige Rester af døde Dyr og Planter, Sekreter og Exkrementer. Da disse jo imidlertid ere lige saa gode Ernæringsmidler som levende Dyr og Planter, tror jeg at det er uberettiget, at der ved Undersøgelsen af Plankton ikke er taget videre Hensyn dertil. De indgaa jo i Massen ved Bestemmelsen af Planktonets kvantitative Mængde, men jeg har ikke set, at der ved den kvalitative Bestemmelse tages Hensyn dertil; og dog udgjøre de kvantitativt i mine mikroskopiske Præparater ofte en saa stor Del, at jeg maatte opgive mine Forsøg paa at veje de ovennævnte smaa Filtre[1]) paa en fin kemisk Vægt, da det meste jeg havde paa Filtret var «Urenligheder» og ikke bestemmelige Dyr og Planter.

Hvorvidt disse mine Forsøg kunne bidrage til Løsningen af Spørgsmaalet om Forholdet mellem Vandets Farve og dets Planktons Art og Mængde, kan ikke besvares, da mine mange Præparater endnu ikke ere undersøgte. En foreløbig Undersøgelse, Hr. Cand. mag. Ostenfeld har foretaget, har kun godtgjort den kjendte Iagttagelse, at stærkt gulgrønt Vand er mere planktonholdigt end blaat; men skal Spørgsmaalet om hvorvidt de mange blaagrønne og grønligblaa Farvenuancer, som Vandet i Vandkikkerten viser og som med Sikkerhed kan fastslaaes ved Hjælp af de farvede Glas, staa i et bestemt Forhold til Planktonets Mængde og Art afgjøres, maa der foretages saavel Vejning som Tælning af Planktonet. Meget vilde være

[1]) Da de smaa Papirfiltre hurtigt bleve forstoppede, anvendte jeg senere Filtre forfærdigede af tykke Atlaskes Baand.

vundet, hvis der kunde paavises et bestemt Forhold; thi Bestemmelsen af Vandets Farve kan paa den Maade, der ovenfor er vist, foretages med stor Skarphed og Lethed.

Den 28de Juni kom vi til Godhavn og samme Dag afgik Kajakker til Skansen og Ujararsusuk for at skaffe Konebaade, for at vi saa hurtigt som muligt kunde komme om i Vaigat og til Kuganguak-Dal, da en paatænkt Vandring ind i denne Dal helst maatte foretages før Solen gik under Horizonten.

Chamberlin[1]) og Pjetursson[2]) have fremhævet, at Godhavns-Halvøen bærer tydelige Mærker af, at den, siden Isen bedækkede den, har været sænket under Vandet, da alle løse Sten ere bortskyllede fra de fremspringende Partier. I Overensstemmelse hermed kan det anføres, at store Samlinger af større stærkt afrundede Sten ses overalt i Lavningerne paa Halvøen, dels paa Bunden af de smaa Søer og dels i Klipperevnerne under Havfladen og ordnede paa en Maade, som kun kan tilskrives en Vandbevægelse. Hvor Gneisen er gjennembrudt af pegmatitagtige Masser, ses her det samme Fænomen, som saa ofte ses paa Graniten i Syd-Grønland, at de tidligere isskurede og stærkt afrundede Flader i Nærheden af Vandet skalle af, idet større eller mindre paa Overfladen glatte Flader løsne sig, og en ny ru Overflade kommer tilsyne. Paa saadanne Steder er det altsaa først nu, at Forvittringen siden Isbedækningen kjendelig gjør sig gjældende.

Klipperne faa paa saadanne Steder et ejendommeligt plettet Udseende; thi medens den gamle Overflade er bleven næsten helt hvid, fremtræder den nye Overflade med Bjergartens oprindelige graasorte Farve. Et karakteristisk Exempel herpaa er det bekjendte «Hvide Næs» ved Julianehaab.

Den 30te Juni om Aftenen forlode vi Godhavn, men sloge allerede Telt paa Østsiden af Røde Elv i Blæsedal, da jeg

---

[1]) Glacial Studies in Greenland. II. Journal of Geology. II. S. 773.
[2]) Meddelelser om Grønland. XIV. S. 303.

ønskede næste Dag at bestige Skarvefjeld for at faa et Overblik over Dalen.

Naar Chamberlin[1]) siger, at der ikke findes nogen Endemoræne i Blæsedal, da har han utvivlsomt Uret og Pjetursson[2]) Ret i, at en saadan findes omtrent saaledes, som den er anlagt paa Lieutn. F. Petersens Kort i Medd. om Grønland XIV. Tv. 10. I Elvlejet i en Højde af c. 80 M. ser man, at denne «Pjeturssons Moræne» hovedsagelig bestaar af store, indtil meget store Sten, der ere stærkt afrundede og ridsede i alle Retninger. Heri saas ikke en eneste Sten af Grundfjeldet, og dette er, som det senere skal omtales, i Vajgat karakteristisk for alle lokale Bræer; de bestaa kun af basaltiske Stenarter. Alle Grundfjeldsblokke her i Dalen, ligesom dem, der findes lige til Toppen af alle bestegne Fjelde paa Disko, maa hidrøre fra den Gang, da Indlandsisen bredte sig ud over hele Disko[3]). Saa vidt man hidtil véd, naar Gnejsen sin største Højde i Disko-Fjord, og kun til de Bræer, der tidligere gik herigjennem, kan det lokale Grundfjelds Stenarter have ydet Materiale til Morænerne. «Pjeturssons Moræne» er i Overfladen stærk leret og har vist senere dannet en Terrasse tvers over Dalen, før Elven skar den igjennem. Paa sin Overflade er den jævnt afrundet og naar en Højde af 130 M. over Vandfladen. Dog gaar den paa Østsiden næsten over i Rousen paa Skarvefjeld i en Højde af c. 200 M. C. 30 Meter herover ses Fjeldvæggen, der bestaar af Mandelsten, at være isskuret i Dalens Retning. Under Bestigningen af Skarvefjeld modtoges vi af en bidende kold Blæst, der umuliggjorde al Maaling og tildels Tegning, dog lykkedes det Greve Moltke at tegne en Rundskizze af Blæsedal og

[1]) l. c. S. 774.

[2]) l. c. S. 299.

[3]) Det samme siger Giesecke: «On the summits of all the mountains which I ascended, I found numerous rolled masses of primitive rocks, often of considerable size, and of a wight beyond my power to move». Transact. of the Roy Soc. of Edinburgh. IX. 1823.

de omgivende Fjelde. Grundfjeldets Stenarter kunne under Bestigningen af Fjeldet forfølges næsten lige til Varden, der efter Lieutn. F. Petersen staar i en Højde af 840 M. Stenenes Størrelse synes at være mindre, jo højere de ligge. Nede ved Morænen saas Sten paa indtil 20 Cubik Meter, medens de oppe paa Fjeldet havde Størrelse som Hoveder eller endnu mindre. De vare alle stærkt afrundede; ingen saas at have Ridser.

Snegrænsen maa her paa Sydsiden af Disko sættes til c. 900 Meter, thi Varden var rejst paa snefri Grund; men kun i en ringe Højde og Afstand derfra synes Sneen at ligge til Stadighed. I samme Højde skjønnedes den ogsaa at ligge paa Lyngmarksfjeld.

Paa begge Sider af Rødeelvs Munding findes en tydelig udpræget Havstokdannelse, der med et Par Afsatser fortsætter sig lige til Vandfladen. Dens største Højde er 22,5 M. Rødeelvs Navn hidrører fra, at den er stærkt farvet af rødt Ler, og Havet ud for dens Munding er i stor Udstrækning farvet deraf. Flere af Diskos andre Elve ere ligeledes stærkt farvede, og denne Iagttagelse gav Anledning til, at jeg i *Geologiska Föreningens i Stockholm Förhandlingar* for 1899 skrev en lille Bemærkning: «Beror Navnet «Hvitåbildningar» egentlig ikke paa en Misforstaaelse?» Professor Torell havde jo i sin Tid[1]) kaldet de Dannelser, Brælvene afsatte, for «Hvitåbildningar», idet han henviste til, at de fleste saadanne Elve paa Island kaldtes Hvidaaer. De Aaer, Islænderne benævne med dette Navn, svare imidlertid ikke ganske til, hvad der forstaas ved Brælve; saa Navnet Hvidaadannelser er, forsaavidt Tanken derved henledes paa de islandske Hvidaaer, ikke helt berettiget.

Foden af Skarvefjeld er dannet af Basalttuf, der gjennemkrydses af en Mængde Gange af lavaagtig Basalt, der er spaltet i store Søjler, der snart ligge vandrette, snart staa lodrette og snart krumme sig i mægtige Buer. Hvor Tufen er denuderet,

[1]) Bidrag till Spitsbergens Molluskfauna. 1859. S. 91.

som i Blæsedal, staa disse Gange frem, og deres mærkelige Former minde ofte om Mure og sammenfaldne Borgruiner.

Per Dams Skib er en i Stranden fritstaaende Klippe af Basalttuf, gjennemtrængt af Basaltgange. Den er landfast ved Lavvande, men omflydt ved Højvande. I Stranden her ses en sort, finkornet Lerskifer, hvori det dog ikke lykkedes at finde Forsteninger. Den er ligesom Tufen gjennemtrængt af Basaltgange, der har knust og udtværet den.

Et kort Stykke Øst for Per Dams Skib findes en karakteristisk Skrænt, Igpik kaldet, der, efter hvad man kan se, for en stor Del bestaar af stærkt rullede Sten og derfor væsentligt har et havstokagtigt Præg. Oprindelig er det dog vistnok en Morænerest fra den Tid, da en Isbræ fyldte Disko-Bugt. Den faste Klippe ses flere Steder at stikke frem, og den har et stærkt Fald indad mod Fjeldet, saa der derved er dannet en lille Sø. Denne Skrænt naar en Højde af 76 M., men Højden aftager stærkt mod Øst. Lavere Terrasser ses pletvis, saaledes én, der, hvor den er højest, er c. 38 M., medens den, vel en 700 Meter længere mod Øst, hvor den ophører, kun har en Højde af 22 M. Basalttufen, der saavel i Lyngmarksfjeld som i Skarvefjeld ligger under de regelmæssige Traplag, der danne de nævnte Fjeldes Hovedmasse, optræder med en grov bænket Lagdeling med Fald mod SSO. Hvor den som i Blæsedal er denuderet, ses den at være gjennemkløvet af lodrette Spalter, smallere og bredere, der hovedsagelig gaa i Retningen N. 30° Ø. — S. 30° V. misv.

Den 5te Juli forlod vi Igpik og fortsatte Rejsen langs Kysten mod Øst. Ved Puilassok, se Hammers og mit Kort over en Del af Dansk Nord-Grønland [1]), har jeg ladet de kulførende Dannelser forsvinde under Trappen. Dette er vel i Hovedsagen rigtigt, men, som allerede Giesecke bemærker, kunne de pletvis

[1]) Medd. om Grønland. IV.

spores i Fjeldskraaningerne helt hen forbi Godhavn[1]). Først ved Sinigfik og navnlig ved Marrak træde disse Dannelser saa stærkt frem, at de give Landskabet en bestemt Karakter, idet de danne Kysten; medens Trappen, som en indtil c. 1000 Meter høj Fjeldvæg, trækker sig indtil $^3/_4$ Mil tilbage derfra.

Samme Dag kom vi til Udliggerstedet Skansen.

Paa mine tidligere Rejser i 1871 og 72 havde jeg undersøgt de kulførende Dannelser i den lave Skrænt mellem Husene og det Vest derfor fremspringende Basaltlag, der fra Hollændernes Tid fører Navnet Skansen, paa Grønlandsk Ivnarssuit, og optaget et Profil deraf[2]). Efter de deri fundne Planterester henfører Heer disse Dannelser til det øvre Kridt[3]). Tidligere havde jeg ikke haft Lejlighed til at søge efter Forsteninger i de højere beliggende Partier, der her naa op til en 5 à 600 Meter over Vandfladen. Uagtet Forholdene ere ugunstige til at søge Forsteninger, da Skiferlag ere sjeldne, og de løse Sandlag ere uskikkede til at opbevare Planterester, lykkedes det dog i en Højde af c. 430 Meter at finde en Del Forsteninger i en Kuljærnsten. Stykker af forkislede Træstykker vare ikke sjeldne, ligesom flere Kullag saas. Kullene ere gode og samles af Skansens Grønlændere, dels til eget Brug og dels til Salg i Godhavn. Da de fleste Kul maa samles i temmelig betydelige Højder paa Sandstensskraaningerne, kjøres de, om Vinteren paa Hundeslæder og om Sommeren i smaa Vogne, ligeledes trukne af Hunde, til Stranden, hvorfra de i Baade og paa Slæder føres til Godhavn.

Hvad der ved Skansen særlig tiltrækker sig Opmærksomheden, ere de udprægede Terrassedannelser. Nærmest Stranden

[1]) »It, (beds of Sandstone) makes its appearance at Aukpadlartok, Akkiarut and Imnarsoit», Giesecke: On the Mineralogy of Disko Island in Transactions of the Roy. Soc. of Edinburgh. Read April 1814, printed 1821.

[2]) Vidensk. Medd. fra den Naturhist. Forening i Kjøbenhavn 1874.

[3]) Meddelelser om Grønland. V. S. 111.

findes en flad, c. 12—15 Meter høj Terrasse, hvorpaa Husene staa, denne skraaner jævnt op mod to andre, der ligge henholdsvis i Højder af 26 og 42 Meter. De ere karakteristiske ved, at deres Affald er stærkt leret (visse Partier ere ligefrem flydt ud), hvad der er saa meget mærkeligere, som de underliggende kulførende Dannelser ere stærkt sandede. Hvad der endvidere karakteriserer dem, er deres havstokagtige Præg, idet deres Affald bestaar af store, stærkt afrundede Sten, hvoraf den allerstørste Del hidrøre fra Grundfjeldets Stenarter.

«Skansen» maa, som ovenfor nævnt, opfattes som en næsten horizontal Basaltgang, der i en skraa Retning har gjennembrudt de kulførende Dannelser med en Mægtighed af c. 50 Meter, og hvis Fortsættelse ses som et Skær ude i Vandet. Uagtet jeg i 1872 fandt Skurstriber paa dens Overflade, der henpegede paa den Tid, da Isen flød ud over hele Disko-Bugt, saa kan det dog ikke siges, at Basaltlaget i sin Helhed er afskuret. Tvertimod er Overfladen meget ujævn og knudret, saa det maa antages, at der under Isbedækningen endnu har været en Rest af det dækkende Sandlag, der har beskyttet det. Basaltlaget ender mod Vandet i en c. 50 til 60 Meter høj, stejl Skrænt, Ivnarsuit, og er afsondret i mægtige lodrette Søjler. Foden af denne Skrænt er dækket af store nedstyrtede Basaltblokke og disse ere, indtil en Højde af c. 25 M. over Vandfladen, stærkt afrundede som af Vand, medens de derover ere skarpkantede. Heraf at drage Slutninger om en bestemt højere Vandstand lader sig imidlertid ikke gjøre med Sikkerhed; thi det er jo muligt, at de skarpkantede Blokke kunne dække over afrundede Blokke; skjønt det fik man dog ikke Indtrykket af.

Den 9de Juli forlode vi Skansen og sloge om Aftenen Telt paa Sydsiden af Mudderbugt. Paa denne Del af Kysten træder Basaltvæggen indtil 1 Mil tilbage fra Vandet; men kun i Mudderbugt strækker sig en Dal dybere ind i Landet, og Indlandsisen, om man kan bruge dette Udtryk om Diskos Isbedækning, ses overalt at dække Fjeldene og nedad Fjeld-

siderne, og overalt i Dalene sender den Bræer ned; dog naa ingen af disse nogen særlig Længde eller ere særlig fremtrædende. Tav. XVII, Fig. 3 viser, efter Greve Moltkes Tegning, et Parti af denne Kyst. Foran denne Fjeldvæg af Basalt ligge de kulførende Dannelser blottede som flade gule Bakker, der dog naa Højder indtil c. 500 Meter. De bestaa næsten udelukkende af Sand, der pletvis er hærdnet til Sandsten. Denne Sandsten optræder dels som Lag og navnlig som runde Kugler, der ligge i Sandlagene, og de frembyde undertiden et ejendommeligt Skue, naar det løse Sand er blæst bort, idet de da staa frem i Overfladen lignende lange Rækker af Champignons, der kunne naa Størrelser af 1 til flere Kubikfod. Skiferlag ses næsten ikke, og da kun omgivende Kullagene, og ere meget sandede, saa de ikke egne sig til Opbevaring af Planterester. Ogsaa Konkretioner af Kuljærnsten synes at være sjeldne. Ned over Sandhøjenes Sider ses en Del Basaltgange at stikke frem. Paa lange Strækninger kunne de gaa ligesom en Mur, men ikke sjeldent have de et skarpt Knæk og gaa da i en anden Retning. Undertiden dele de sig eller udsende smaa bugtede Udløbere eller have store kuppelformede Udvidelser. Naar man saaledes som her kan overse Basaltgangene i horizontal Retning over større Strækninger, faar man ret Følelsen af, hvor betydningsløst det er at aflæse paa Kompasset de Basaltganges Retning, man f. Ex. ser stikke lodret ud af en Skrænt, thi en saadan Gang kan ofte have forandret Retning.

Hvad der endvidere falder i Øjnene, ved at gaa hen over de kulførende Dannelser her, er den Mængde indtil flere Kubikmeter store Sten, der findes spredt overalt, men navnlig ere samlede i Elvlejerne. De bestaa af Granit eller Gneis og ere alle stærkt afrundede. Det er det karakteristiske ved disse Sten, der ligge spredt paa Højlandet, og som alle ere bragte med Isen fra Fastlandet, at de ere saa stærkt afrundede, som om de havde ligget i en Elv eller ved en Strandbred med et stærkt Bølgeslag. Aldrig tror jeg at have set en skarpkantet Blok paa saadanne Steder.

Da jo ellers Reglen er, at de kulførende Dannelser dækkes af Trappen, er der heller ingen Tvivl om, at de nu blottede Sandhøje mellem Skansen og Isunguak ogsaa engang have været dækkede deraf; Basaltgangene vidne jo om, at ogsaa her er plutoniske Masser brudt frem. Det kunde derfor ved første Øjekast synes mærkeligt, at Isen, der har bortført mægtige Lag af den haarde Basaltdannelse, her har ladet de forholdsvis løse kulførende Dannelser staa tilbage i deres omtrentlig oprindelige Mægtighed; men Grunden kan vel kun være den, at Bevægelsen i Isen er hørt op, da Denudationen naaede saa vidt.

Lavlandet omkring Mudderbugt er dækket af en leret Moræne, vel en Bundmoræne, hvis Overflade har et karakteristisk kuperet Udseende. En Mængde store afrundede Sten stikke frem af Overfladen, hvoraf de største bestaa af Grundfjeldets Stenarter, medens Hovedmængden er Basalt. Kysten er sandet, og en Sandrevle er opkastet paa Mudderbugts Sydside. Ved Lavvande er denne Bugt for største Delen tør; Rester af Basaltgange rage som Skær frem af dens Bund.

Efter et Ophold af nogle Timer ved Forstanderskabshuset ved Isunguak paa Grund af stiv Modvind, kom vi den 12te Juli til Udstedet Ujaragsugsuk. Tav. IX viser det meste af Kysten mellem Isunguak og Ujaragsugsuk og er typisk for Fjeldsidernes Udseende i Vestenden af Vajgat. Fjeldet yderst til venstre er Isunguak, der naar en Højde af c. 860 Meter, og det spidse Fjeld i Midten er Ingisok, der er lidt højere eller c. 875 Meter. Nederst paa Billedet ses en lav, c. 5—10 Meter høj Skrænt, der bestaar af de kulførende Dannelsers Sand og Sandstenslag, der stadig holdes blottede ved Bølgebevægelsen, fremkaldt enten ved Efteraarsstormene eller Isfjeldenes Kalvninger. Herover følger en jævn opadstigende Skraaning, der er mere eller mindre bevoxet, og som paa store Strækninger bestaar af stærkt sandede Morænemasser, og som er karakteristisk ved en Masse af store, stærkt afrundede Sten, hvoraf de største i Regelen bestaa af ældre Bjergarter, som Gnejs, Granit o. s. v. Derover kommer

et stærkt indskaaret stejlere Parti, der er karakteriseret ved de hvidgule Vægge i Kløfterne, og hvori de kulførende Dannelser ses at ligge i uforstyrret Lejring. Herover kommer saa Traplagene, hvis nedre Grænse ses uskarp, paa Grund af at de stærkt kløftede Bjergarter, Basalt og Mandelsten, let styrte ned og bedækker denne Grænse.

Mægtige vertikale og horizontale Basaltgange, saaledes som det f. Ex. tydeligt ses paa Siden af Isunguak, gjennemkrydse de kulførende Dannelser. Nogen stærkere Forskydning af Lagene (Spring) synes disse mægtige Gjennembrud kun sjeldent at have bevirket. Heller ikke faar man, med enkelte Undtagelser[1]), Indtrykket af, at Basalten er brudt frem med en saa stor Varme, at den fysisk har paavirket de gjennembrudte Lag, derimod er der ofte Spor af, at Basalten kemisk har paavirket sine Omgivelser, idet disse ere hærdede. — Over Trappen ses paa Billedet endelig Is- og Snelaget, Firnen, at træde frem. — Billedet er taget fra Nugarsuk.

Ujaragsugsuk er bekendt som Findestedet for *Protopteris punctata*, men ellers ere Forsteninger her sjeldne, da Sandstenen er grovkornet. I det andet Elvleje Vest for Husene saas Aftryk af flere Fod lange, men fladtrykte og fuldstændig utydelige Træstammer. Sandstenen forfulgtes op til en Højde af c. 520 M., hvor den dækkes af mægtige Basaltsøjler. Det for Ujaragsugsuk karakteristiske Sømærke, den fremspringende Klippe Igdlorsuausak, er et Knippe af saadanne Søjler, vel et Parti af en mægtig Lavastrøm. I en Højde af c. 300 Meter fandtes i en grovsandet Skifer nogle meget utydelige Blade af Løvtræer, vel det samme Lag, som Nathorst har bestemt som tertiært[2]).

Den 14de Juli om Aftenen afrejste vi fra Ujaragsugsuk til Unartuarsuk, hvor der for Øjeblikket brydes Kul til Kolonien Ritenbenk. Paa Vejen passerede vi de «varme» Kilder ved

[1]) Meddelelser om Grønland. IV. S. 190.

[2]) Nordenskiöd: Den andra Dicksonska Expeditionen till Grönland. S. 262.

Husene ved Unartok; Temperaturen var den 3die August 6° C. Unartok betyder vel den varme; men dermed menes ikke altid en Kilde med en absolut høj Varmegrad; den behøver kun at løbe hele Vinteren. Over et saadant stadigt løbende Vand staar der om Vinteren ved høje Kuldegrader en hvid Taage, der ligner Vanddampe.

I den c. 30 Meter høje Skrænt ved Unartuarsuk findes 2 Kullag i en Afstand af c. 7 Meter fra hinanden. De ligge i sort Lerskifer. Det øverste Lag har en Mægtighed fra 13 til 60 Centimeter. Faldet er 10°—15° i nordvestlig Retning. I Vestenden af Skrænten findes en c. 1 Meter bred stærkt forvittret Basaltgang, der til begge Sider, i en Bredde af 1 til 2 Meter, har hærdet Skiferen til en perlegraa Porcellænsjaspis lignende Stenart. Denne gaar over i løst, stærkt kulholdigt Sand; dog er der paa Vestsiden, mellem Porcellænsjaspisen og det kulholdige Sand et c. 6 Dm. bredt Mellemrum, der er udfyldt af en perlegraa, sandet, fedtet Ler. Denne Porcellænsjaspis, der er kvartshaard og med muslet Brud, og som forøvrigt findes flere Steder, hvor en Basaltgang har gjennembrudt Lerskiferen, har i tidligere Tid af Grønlænderne været anvendt til Pilespidser og Knive (Angmak).

Lige Vest for Unartuarsuk ligger den af mig tidligere omtalte døde Bræ, Ujaragsuit kaldet, paa Grund af at den er saa stærkt dækket af store, for en stor Del skarpkantede Sten, saa det Hele ser ud som en uhyre Stendynge[1]). I Aar var den forøvrigt langt tydeligere, end jeg tidligere har set den, idet Isen stak frem paa en Strækning af over 100 Meter. Bræen er tydelig lagdelt med bøjede Lag og mange Spring. Den er blottet i en Højde af c. 30 Meter og gaar lige til Højvandslinien. Kysten her ud for maa gaa meget stejlt ned, da selv større Isfjelde ligge tæt ved Land. Paa Grund af Isens Afsmeltning ruller der stadig Sten ned ad Bræenden, saa det er forbunden

[1]) Meddelelser om Grønland. IV. S. 80.

med Fare at gaa neden for den. Gaar man ovenpaa Bræen, ser man, at den er bedækket med uhyre Masser af større skarpkantede Sten, Grus, Sand og Ler. En Mængde store Revner findes, men da de næsten altid ere fyldte med Sten, ses Isen kun sjeldent. Denne «døde» Bræ har ingen synlig Forbindelse med Højlandsisen, hvorfra der nu gaa to smaa Bræer ned, der dog allerede ende i en Højde af 6—700 Meter over Vandfladen. Den sydligste falder ud over en Bratning. I disse Bræers Moræner ses ikke andre end Basaltblokke; i den «døde» Bræs Moræner er der derimod en Mængde af Granit og Gnejs.

Den 17de Juli rejste vi fra Unartuarsuk til Kutdlisat. Et gammelt Beboelsessted, Kujartorfik kaldet, passeredes og tiltrak sig Opmærksomheden ved den ualmindelige Mængde af store, afrundede Granit- eller Gnejsblokke, der fandtes nær Stranden.

Ved Kutdlisat kommer en betydelig Bræ ned fra Højlandet. Se Tavle XVII, Fig. 1. Den dannes ved Sammenflydning af 5 Bræer. En større i Midten og to paa hver Side af den, dog ere de to paa den vestre Side de betydeligste Fra Sammenløbet til Enden var Bræen c. 5000 Skridt lang. Højden paa Bræen ved Sammenløbet var c. 700 Meter, medens Enden laa i en Højde af c. 250 M. Mægtigheden i Enden var c. 60 Meter. Fjeldranden herover naar en Højde af c. 1450 Meter og Firnens Mægtighed fandtes at være c. 20 Meter [1]).

Tavle XIV, Nr. 2 viser et Parti af denne Bræ med de bekjendte Kryokonithuller, det er Huller, der opstaa ved, at Lerslammet, der føres af Smeltevandet, samler sig i Fordybninger, og disse blive saa efterhaanden dybere ved at Slammet indsuger Solvarmen. Naar Solen gaar bag et Fjeld eller gaar under Horizonten, fryser Vandets Overflade i Hullerne øjeblikkelig, saaledes som det ses paa Fotografiet. Hullerne ere lodrette og ikke, som det af Billedet kunde synes, radiært stillet; men dette hidrører fra Fotograferingen, da det var nødvingt at stille Ka-

[1]) Sammenlign hermed: Meddel. om Grønland. IV. S. 77.

meraet lodret, med Objektivet nedad, for at kunne give et Billede af Bunden i Hullerne.

Hosstaaende Zinkætsning viser endvidere et Parti fra Enden af denne Bræ med en Række af stærkt afrundede ikke isskurede Basaltblokke. Hvorfra disse stærkt afrundede Sten stamme, er ikke klart; thi i Side-Morænerne findes de næppe. Kunne de hidrøre fra Bundmorænen og derfra under Bevægelsen og ved

Overfladens Afsmeltning saa efterhaanden være kommen op til Overfladen?

Ved Ritenbenks Kulbrud, c. 1/2 Mil NV. herfra, gaar ligeledes en større Bræ ned fra Højlandet. Forholdene ere omtrent de samme som ved Kutdlisat. En under ugunstige Forhold foretagen Maaling gav ikke saa nøjagtige Resultater, at de kunne meddeles.

Som Bidrag til i Fremtiden at dømme om en mulig Forandring i Vandstanden foretoges et stamphersk Nivellement her

ved Kutdlisat mellem den øverste Tangrand paa Nordsiden af Halvøen og det højeste Punkt af denne (Enden af en Basaltsøjle). Højde-Forskjellen fandtes at være 14,4 Meter. Cand. Morten Pedersen har endvidere paa Halvøens NV.-Ende indhugget følgende Mærke og $\frac{2,4\ M.}{1898.}$ ov. Hv., der skal betegne, at Stregen er indhugget 2,4 Meter over de grønne Algers øverste Grænse. Over Stregen er med hvid Maling malet en Figur som et liggende latinsk H.

Tavle X viser den Skrænt, der paa Grund af, at der tidligere brødes en betydelig Mængde Kul til Kolonien Ritenbenk, specielt kaldes Ritenbenks Kulbrud. Jeg har før givet en Beskrivelse og et Profil af dette Sted[1]), hvorfor jeg her kun skal henvise til Billedet som typisk for de Partier af de kulførende Dannelser, der afvexlende bestaa af Skifer og Sandstenslag. Billedet er taget fra det lille fremspringende Parti, der kaldes Nungerut, den lille Odde. Det er et Parti af en plutonisk Bjergart, der gangagtig har gjennembrudt de kulførende Dannelser. Allerede første Gang, 1871, da jeg opholdt mig paa dette Sted, blev jeg opmærksom paa denne Bjergart, da den havde et ejendommeligt Udseende, fuldstændig lig den senere bekjendte Bjergart med metallisk Jærn fra Asuk. Den var som denne fuld af Grafit; men metallisk Jærn kunde jeg i alle mine Prøver ikke paavise. I Aar derimod lykkedes det mig strax at paavise metalliske Jærnkorn deri, og Overensstemmelsen med Asukbjergarten er saaledes nu fuldstændig.

Den 21de Juli rejste vi fra Kutdlisat til Asuk. Paa Vejen passeredes det c. 60 Meter høje, stejle Fjeld, Ivnarsukasik (det grimme, daarlige, stejle Fjeld). Det bestaar af Palagonittuf med Gange og uregelmæssige Partier af en meget olivinholdig Basalt, og endvidere fandtes deri udtværede Partier af en kalkholdig Lerskifer. Ved Navnet Asuk synes der at betegnes flere

[1]) Vidensk. Meddelelser fra Naturhist. Forening i Kbhvn. 1874. Nr. 3—7 Tav. VIII.

flade, sandede Odder, egentlig Deltaer, aflejret af Elve, der komme fra Firnen paa Højlandet. Enden af den Bræ, hvis Elv har dannet den sydligste af Asuk-Odderne, fandtes at ligge i en Afstand af c. 7000 Meter og i en Højde af 546 Meter over Vandfladen. Kysten ved Asuk dannes, som sædvanlig her i Vajgat, af en c. 30 Meter høj Skrænt af de kulførende Dannelser, Sandsten og Skifer, der falde c. 10 Grader i sydlig Retning. — Nogle Planteforsteninger samledes, og, hvad der ellers er sjeldent, i en Skifer fandtes Nyrer af Kalksten. Flere mindre Basaltgange gaa lodret gennem Lagene, men frembøde intet særligt ud over det, at Bjergarten var stærkt forandret. Da træder med én Gang, ved en gammel Hustomt, den ejendommelige jærnførende Bjergart frem, som jeg, paa Grand af, at den ved Overgange var forbunden med den jærnførende Basalt ved Blaafjeld, ogsaa antog for en Basalt, men som allerede Törnebohm[1]) erklærede for at være en Andesit, en Opfattelse, som Dr. Nicolau senere har bekræftet, idet han nærmest henførte den til Hypersthenandesiterne[2]). I Hefte IV, S. 124, af «Meddelelserne» findes Kaptejn Hammers Tegning af denne Skrænt, set fra NV., og Tavle XI gjengiver et Fotografi, taget fra den modsatte Side. Nederst ses en ejendommelig breccieagtig Tuf, der forsaavidt ligner den almindelige Tuf, der overalt paa Disko danner det ældste Led af Trappen, men her har den Ejendommelighed, at de skarpkantede Brudstykker, hvoraf den bestaar, hidrøre fra den jærnførende Hypersthenandesit. Herover ligger, som sædvanlig i Tufen, et mægtigt Lag af Søjlebasalt, vel en Rest af en tidligere Lavastrøm, idet man ser, hvorledes den Masse, der danner Søjlelaget, ligesom er udtværet i Tufen. Dette Lag gaar umiddelbart over i den jærnførende Andesit. Denne er denuderet, saa man ikke umiddelbart ser, hvad der

[1]) Törnebohm: Über die eisenführenden Gesteine von Ovifak und Assuk in Grönland. (Bih. till Kgl. Sv. Vet. Akad. Handlingar. Bd. IV, Nr. 10. Stockholm 1878.)

[2]) Meddelelser om Grønland. XXIV. S. 241.

dækker den, men det er uden Tvivl igjen Tuf, saa det Hele er, som almindeligt her paa Disko, et Lavalag, der har brudt igjennem Tufen. Under mit korte Besøg i 1880 [1]) saa jeg ikke, at Tufen bestod af en væsentlig Del af den jærnførende Andesit. Hvor mægtigt det hele Lag er, kunde jeg ikke bestemme; hele Skrænten er c. 30—40 Meter høj; men Tufen, der her paa Diskos NV.-Side tiltager stærkt i Mægtighed, kunde jeg forfølge til en Højde af over 400 Meter; dog var det der den almindelige Tuf. — Kvartsmandler, større og mindre, fandtes baade i Tufen og i Søjlebasalten, men medens de i Tufen altid helt vare fyldte med Kalkspath, vare de i Søjlebasalten enten helt fyldte med en ofte hyalitagtig Calcedon eller ogsaa indeholdt de en Kjerne af skarpkantede Kalkspath-Krystaller, der omsluttedes af Calcedon, saa det tydeligt saas, at Calcedonen var en yngre Dannelse end Kalkspathen.

Hvad den jærnførende Andesit angaar, da lykkedes det mig ikke denne Gang at finde nær saa store Partier af sammenvoxede Jærnkorn, som i 1880, og i det Hele taget lykkedes det mig ikke at gjøre nye Iagttagelser, der kunne bidrage yderligere til Forstaaelsen af denne mærkelige Bjergarts Dannelse. I Regelen har den en bænket Afsondring, dog findes der ogsaa Partier med en udpræget skalformet Afsondring. I Dr. Nicolaus' foranstaaende Afhandling er Spørgsmaalet om denne Bjergarts Dannelse optaget paany, og jeg tror, han har Ret, naar han mener, at den ikke kan opfattes som en umiddelbart omsmeltet Lerskifer. Den er utvivlsomt en Bjergart, der i smeltet Tilstand er brudt frem som en anden plutonisk Bjergart, paa samme Maade som f. Ex. den stærk olivinholdige Basalt ved Igdlokunguak [2]) med den store Magnetkiesmasse, der jo i Størrelse og hele Optræden fuldstændig svarer til Jærnmasserne i Basalten ved Blaafjeld. — Kunde man maaske mene, at Jærnet

[1]) Meddelelser om Grønland. IV. S. 123.

[2]) Smst. IV. S. 131 og Vidensk. Medd. fra den naturhist. Forening i Kbhvn. 1875. S. 304.

i Andesiten ved Asuk dog maaske alligevel kunde hidrøre fra de kulførende Dannelsers Kuljærnsten — skønt denne vides ikke at kunne have ydet Nikkel- og Koboltmængden — da den der ligger over kulførende Dannelser; saa kan dette ikke forklare Forekomsten af Jærnet ved Blaafjeld, da der dèr, saa vidt man véd, ingen kulførende Dannelser findes under Basalten, men denne maa antages at hvile umiddelbart paa Gnejsen. — En enkelt Forklaringsmaade for Jærnets Dannelse tror jeg forøvrigt ikke lader sig gjennemføre; thi dels forekommer det, som i Blaafjeld, som det sidst udskilte Mineral i en plutonisk Bjergartsmasse, og dels, som ved Jærnpynt, udfylder det, sammen med Magnetkies, langstrakte Blærerum paa en Maade, der fuldstændig ligner den, hvorpaa Calcedonen optræder under lignende Forhold, og endelig findes det dendritisk udskilt paa Kløvningsfladerne i Basalten ved Blaafjeld paa samme Maade, «strikket» som det tidligere hed, som f. Ex. Sølvet paa Spalter i Kongsberg.

Den 26de Juli rejste vi fra Asuk til Kuganguak passerende Asuk-Odderne, der alle ere Deltaer fra Elve, der komme fra Bræer paa Højlandet, dog strække disse sig kun kort ned ad Fjeldkløfterne og ende alle i Højder af c. 8—900 Meter over Vandfladen. Hvad der særlig tiltrækker sig Opmærksomheden ved at passere denne Kyst, ere de ejendommelige lerede Terrasser, der bedække Bjergskraaningerne ofte til betydelige Højder; nogen øverste Grænse derfor lykkedes det mig ikke at bestemme. De bestaa af leret Sand og Grus, der væsentligst bestaar af Trappens Dekompositionsprodukter, men som altid er karakteriseret ved stærkt afrundede Blokke af Grundfjeldet; ja disse Stenes Antal kunne undertiden blive saa stort, at man kunde fristes til at bruge Udtrykket Brolægning. Disse Terrasser have et moræneagtigt Præg; men om de end kunne strække sig ind i Elvdalene, saa bære de dog absolut Præget af at høre til Vaigats Kyst og synes ikke at have noget med Lokalbræerne at gjøre. Hvor Elvene have skaaret sig igjennem dem, ses de at

være lagdelte, se f. Ex. Tav. XIV, Fig. 1. Man faar nærmest Indtrykket af, at det er Morænerester fra den Isstrøm, der utvivlsomt i sin Tid er gaaet gjennem Vaigat, og at de svare til de bekjendte forsteningsførende Lag ved Pagtorfik i Umanak-Fjord [1]). Her i Vaigat har jeg dog forgæves søgt efter slige Forsteninger.

Kuganguak er Diskos største Dal, og skulde der være Tale om, at nogen Dal strakte sig igjennem større Dele af Øen, maatte det være denne.

Den eneste Europærer, der synes at have gjort Forsøg paa at undersøge denne Dal, er den bekjendte engelske Bjergbestiger Edward Whymper, der under sit Ophold i Grønland i 1872 gik «en stiv Dagsmarsch ind i den« [2]), uden dog, saa vidt jeg véd, at have publiceret noget nærmere derom ud over det, at han ikke kunde se Enden paa den.

Da jeg i 1880 sammen med daværende Premierløjtnant R. Hammer besøgte Nordfjord paa Disko, saa vi i Bunden af denne Fjord, at en Dal gik i nordlig Retning, og den Tanke laa da ikke fjern, at den mulig stod i Forbindelse med Kuganguak-Dal.

Uagtet den Elv, der flyder i Kuganguak-Dal, utvivlsomt er Diskos største Elv, saa kalde Grønlænderne den dog med Diminutivum: Kuganguak ɔ: den mindre betydelige Elv. Grunden hertil er vel, at den i Størrelse ikke kan maale sig med den nærliggende langt større Elv, der kommer fra Nugsuak-Halvøens Indre, og som Whymper paa det ovenfor anførte Sted sammenligner med den Vandmasse, Rhonen udgyder i Genfersøen. — Der var altsaa ikke Tale om, at denne Elv lod sig vade over, hvorfor det var af stor Betydning for os at vide, paa hvilken Side af Elven man bekvemmest og lettest kunde trænge ind i Dalen. Herom kunde Grønlænderne, der vare lige saa ukjendte

[1]) Meddelelser om Grønland. IV. S. 232.
[2]) «Dagbladet» for 23de November 1872.

med Dalen som vi andre, ingen Oplysninger give, og efter Øjesyn var der intet, der mere talte for at gaa langs den ene end langs den anden Side af Elven. Da vi, som kommende Øst fra, havde slaaet Telt paa Østsiden, valgte jeg at foretage vor Vandring, for at lære denne Dals Indre at kjende, ad denne Side, hvilket viste sig at være det ene Rette, thi ad den anden Side vilde det have været umuligt, paa Grund af Elve og store Stenuser at trænge ret langt ind.

Bjergarten her er fremherskende Basalttuf og det, som det synes, lige til Toppen af Fjeldene, der her naa op til 1000 à 1500 Meter, ja maaske endnu højere. Fotografiet Tav. XIII, Fig. 2, der viser det c. 400 Meter høje Fjeld, der ligger paa Dalens Østside, giver et Begreb om den ejendommelige Lagdeling, der udmærker disse Fjelde af Basalttuf og som gjør, at de skarpt adskille sig fra de regelmæssige Trapfjelde (sammenlign hermed Tav. XIII, Fig. 1), enten Lagene som her falde under store Vinkler eller de, som i de regelmæssige Trapfjelde, ligge horizontalt [1]).

Den 27de Juli om Morgenen gik Cand. Pedersen og jeg ledsaget af 3 Grønlændere og en Grønlænderinde, der bare et lille Telt og Proviant for 3 Dage, ind i Dalen paa Østsiden af Elven. Dalen, der vel i Gjennemsnit er c. ½ Mil bred, er jævn og flad i Bunden, væsentligst bedækket med smaat Grus og uden væsentlig Vegetation, saa den afgiver en fortrinlig Spasserevej. En Mærkelighed forekom, nemlig at der næsten ikke mærkedes til Myg, uagtet Vejret var stille og smukt. Grunden hertil maa vel være den næsten totale Mangel paa Fugtighed; ikke et eneste Vandløb kom ned fra Fjeldene, og alle Elvlejer vare udtørrede.

[1]) Ved regelmæssige Trapfjelde forstaas de Fjelde, der bestaa af afvexlende tæt Basalt og porøs Mandelsten, i Regelen adskilte ved et rødt Lerlag. De fremtræde typisk paa Sydsiden af Disko, og Lagstillingen synes altid at være horizontal.

I sin ydre Del gaar Dalen i omtrent retvisende Syd og begrænses paa begge Sider af 12—1500 Meter høje Fjelde, der bestaa af bænkede Tuflag, der i det Hele ligge horizontalt. Ved Middagstid viste en Observation af Solen i Meridianen, at Bredden paa dette Sted var 70° 9′8 N. B., og da Mundingen af Dalen ligger paa 70° 16′ N. B., havde vi altsaa gaaet 6 Minutter eller $1^1/_2$ Mil. Skridttælleren viste, at vi havde gaaet 14000 Skridt, og Barometret viste paa dette Sted en Højde over Vandfladen af 150 Meter. Dalen gjorde i høj Grad Indtrykket af, at den tidligere havde været en Fjord. Den samme moræneagtige Masse, som omtalt i Vajgat, med de mange og store afrundede Sten af Grundfjeldet fandtes ogsaa her, og hvor Vandløbene fra Fjeldene havde gjennemskaaret den, mindede den pletvis om Terrasser. Fossile Skaller af Saltvandsmollusker lykkedes det mig ikke at finde. Efter at have gaaet endnu c. 7000 Skridt i samme Retning, omtrent retv. Syd, bøjer Dalen i omtrent SØ. Paa Vestsiden af Dalen udmunde her et Par større Dale, der ere udfyldte af Bræer. Medens der fra Østsiden af Dalen hverken var kommen en eneste Bræ eller Elv ned, havde Vestsiden derimod flere Bræer og mange rivende Elve, der flød imellem mægtige Rullestensmasser, saa en Fremtrængen paa denne Side af Elven vilstnok er en Umulighed.

Omtrent overfor den sydligste af de to ovennævnte Dale, lige over for to smaa «sorte», det vil sige med Morænemasser næsten helt dækkede Bræer, der dog kun gaar ned til en Højde af c. 800 Meter over Vandfladen, sloge vi Telt i en Højde af 270 Meter. I Fjeldvæggen her over Teltpladsen, i en Højde af c. 370 Meter, saas en Bjergart, der i Udseende og Optræden mindede om den jærnførende Andesit fra Asuk, og ved en foreløbig Undersøgelse fandtes det ogsaa at være denne Bjergart. Mægtigheden af Laget synes at være c. 20 Meter og det optraadte som et underordnet Lag i Tufen. Saavel den rustrøde Farve som den skalformede Afsondring gjør den kjendelig i Afstand. Nærmere beset mindede Strukturen mere om den jærnførende Bjergart i Mellemfjord end om den ved Asuk.

Paa Grund af Taage fik jeg den anden Dag ingen Observationer, saa kun Kompasset og Skridttælleren kunde anvendes til Bestemmelsen af Retninger og Afstande. Hvor langt vi derfor vare trængte frem, da vi om Eftermiddagen Kl. 3 standsedes af en mægtig Bræelv, den første, der kom ned paa Østsiden, og som ikke lod sig vade, kan ikke nøjagtig angives, saa meget mere, som Elvlejet i Dag langt fra var saa jævnt som i Gaar, saa Skridttællerens Angivelse ikke nær havde den Værdi som Dagen før. Den viste, at vi den anden Dag havde gaaet henimod 14000 Skridt, indtil Elven standsede os; men jeg antager ikke, at dette svarer til mere end det Halve eller to Trediedele af Afstanden igaar. Her bøjer Dalen igjen og gaar i S. 30° Ø. Taagen lettede heldigvis og vi kunde nu se, at Dalen lukkedes ved, at 4 betydelige Bræer kom ned i Enden af den. Det Maal, vi havde sat os, nemlig at se, hvor denne Dal førte hen, var altsaa naaet; altsaa ogsaa denne Diskos største Dal førte ikke gjennem Øen; men endte i det indre Højland. — Dalbunden laa, der hvor vi standsede, i en Højde af 340 Meter.

Da Terrainet her var altfor ujævnt til, at der kunde udstikkes en Basis, ja selv for ujævnt til, at Teltet kunde rejses dèr, gik vi c. 800 Meter tilbage og sloge Telt for Natten. Ved en her udstukken Basis fandtes det, at Dalens Bund med Bræerne laa i en Afstand af c. 2 Mil fra Teltpladsen. Da vi den første Dag havde gaaet c. 2 Mil, og den anden antagelig noget over 1 Mil, kan altsaa Dalens hele Længde anslaas til c. 5 Mil. Afsættes denne paa Hammers Kort over Disko, vil det ses, at Dalen ender omtrent ved Nordfjords Bund. Om derimod de 3 Fjeldtoppe, der paa Kortet er afsat Nord for Nordfjord, kunne ses her fra Dalen, kan ikke afgjøres, da vi fra Dalen ingen Overblik kunde faa over Terrainet, og en Bestigning af Fjeldene her var uudførlig under de givne Forhold; dog er det sandsynligt, at de høre til det Fjeldparti, der danner Vestsiden af det Indre af Kuganguak-Dal.

Den jærnførende Andesit saas hele Vejen i Fjeldvæggen, og den laa, ved vor anden Teltplads, i en Højde af 500 Meter over Vandfladen. Her syntes den dog at forsvinde, og den øverste Del af Fjeldvæggen antager herfra og Syd efter en ejendommelig stærk rød Farve, der stikker stærkt af mod den nedre Del, der er graa. Hvilke Bjergarters Optræden eller hvilken Forandring, Dekomposition, af Bjergarten, der bevirkede denne Farveforandring, fik jeg ikke Lejlighed til at undersøge.

Forholdene ved den jærnførende Andesits Optræden synes her omtrent at være som ved Asuk, dog lignede den petrografisk mere det Udseende, som Bjergarten har i Mellemfjord: Nederst i en Kløft saas en ejendommelig konkretionær tufagtig Basalt, der opad gik over i en tyksøjlet, stærkt forvittret Basal med ejendommelige lange Blærerum, der vare saa regelmæssige at de mindede mere om borede Huller end om Blærerum. De vare fyldte med en porøs Mandelsten. Herover kom saa Lage af den jærnførende Andesit. Som ved Asuk dækkes dette La af Grus, saa den dækkende Bjergart ikke ses. Igjennem Andesiten gik en c. 0,6 M. bred Gang af almindelig doleritisk Basalt, der viste Afkølingsflader mod Andesiten.

Næste Dag, den 29de Juli, gik vi tilbage til Kysten. Skridttælleren viste, at vi den Dag havde gaaet 43000 Skridt.

Den 31te Juli tiltraadte vi Tilbageturen gjennem Vajgat. Ligesom paa Henturen vare Fjeldene paa Diskosiden indhyllede i Taage, saa der bogstavelig, fra vi den 14de Juli rejste fra Ujaragsugsuk, til vi den 3die August kom tilbage dertil, kun en eneste Dag var Lejlighed til at se Fjeldtoppene; det var den 2den August, da vi for stiv Kuling havde maattet slaa Telt ved Marrassuit ved Narsak. Her danne de kulførende Dannelser paa en Strækning af c. 500 Meter en af Slugter afbrudt stejl Skrænt, der naar en Højde af 50—100 Meter. Denne bestaar væsentligst af hvidt, løst, groft Sand, der indeholder dels Konkretioner, dels hele Lag af en grov Sandsten. Den løse Sandsten er som knust af Isen, og Kulstykker ses udtværede deri. Kul-

jærnsten fandtes kun sparsomt; dog samledes nogle Plante-forsteninger deri.

Narssak betegner, som Navnet siger, et forholdsvis fladt Land, der ligger foran Fjeldvæggen, der i Afstand er let kjendelig ved to halvmaaneformede Kløfter. Igjennem disse har, som Moræneresterne vise, tidligere gaaet Bræer ned mod Kysten. Lavlandet indtil en Højde af c. 500 M. synes at være bedækket af den tidligere omtalte lerede Morænemasse med Gnejsrullesten.

Saa højt oppe dækker den, som et tykkere eller tyndere Lag, saavel de kulførende Dannelser som de mere eller mindre til Grus forvittrede Trapfjelde, uden at den Lagdeling, der karakteriserer den nær Vandfladen, her er kjendelig.

Ved Marrarsuit laa endnu Resterne af Vinterens Sne og Is lige til Højvandslinien, hvor det dannede en Isfod, saaledes som hosstaaende Zinkætsning viser, og det er tvivlsomt, om den vilde forsvinde i denne Sommer. Naar en Elv bliver ved at løbe hele Vinteren, gjennembryder den hist og

isfri Dal, der kunde føre ind i det Indre, var den ikke. Før vi forlode denne Fjordarm, gjorde jeg imidlertid en Tur med et Par Grønlændere ind over en Lavning, der bag Akuliarusersuak strakte sig henimod Disko-Fjords sydligste Arm. Taage, der paa Højlandet faldt ned som Snebyger, hindrede imidlertid Overblikket. Fjeldskraaningen var bedækket med det oftomtalte tynde Morænelerlag, men her saa jeg ikke en eneste Sten af Grundfjeldet. For neden indeholdt det Skaller. Efter at have gaaet 7200 Skridt og være naaet op til en Højde af 520 Meter, standsedes vi af en Dal med meget stejle Vægge, og hvori der flød en Elv, der fik Tilløb fra et stort Antal Bræer. Dalen gik i N. 56° V. (misv.) for pludselig under en næsten ret Vinkel at gaa i S. 54° V. for derpaa igjen at antage den tidligere Retning. Foruden en stor Bræ, der saas at udfylde Østenden af Dalen, gik 11 Bræer ned deri, de 6 Øst for det dobbelte Knæk, de 5 Vest derfor. Paa Østsiden af Akuliarusersuak laa der en lille Bræ, der havde et ejendommeligt Udseende derved, at den ene Sidemoræne, henimod Enden, i en Bue svinger ind og ender midt i Bræen med en skarp afskaaren Rand. Grunden hertil er vist, at Bræen oprindelig bestod af 2, i Taagen saas en Nunatak i Midten, og at den derved opstaaede Midtermoræne pludselig forsvinder derved, at den ene (den sydlige) Bræ har større Masse og Hastighed end den anden (den nordlige), saa den dækker den nederste Del af Midtermorænen.

Den 1ste September sloge vi Telt i Disko-Fjords sydligste Arm og, ligesom i Kvannersuit, der hvor Fjorden løber tør ved Lavvande. Paa Vejen passerede vi Akuliarusersuak's Sydende, og her findes ganske lignende Forhold som ved Tarajungitsok, idet en raaden Gnejs dækkes af en grov arkoselignende Sandsten; Forholdene ere her imidlertid mindre tydelige, da løse Masser dække Grænsen [1]). Den øverste Terrasse her naar en

[1]) Se ogsaa Meddelelser om Grønland. IV. S. 183.

Højde af 177 Meter[1]). Denne Fjordarm, der ikke besøgtes af Hammer og mig i 1880, er derfor afsat for kort paa vort Kort over Disko. Rinks ovennævnte Specialkort over Disko passer derfor bedre. Af de Maalinger, jeg her foretog, vistnok omtrent paa samme Sted som Rink, kan fremhæves, at Stedet laa 8420 Meter (26800 Fod) Øst for Gnejshumplerne ved Kivitût, endvidere at der fra Teltpladsen var 9000 Meter (28680 Fod) til et Fjeld paa Nordsiden af Fjorden, som laa paa Østsiden af den Dal, jeg havde set, ved fra Kvannersuit at gaa bag om Akuliarusersuak. Langt inde i Bunden af Dalen, der hvor denne deler sig, laa et 930 Meter højt Fjeld i en Afstand af 12000 Meter (38900 Fod), og endelig laa den Dal, der her fra gaar ud til Disko-Bugt Øst for Skarvefjeld, c. 3000 Meter (1000 Fod) Øst for Teltpladsen.

Herover hævede sig et c. 460 Meter højt Plateau, hvor Basalten var stærkt forvittret og havde det tromlede Udseende, som den under saadanne Forhold altid faar. Ogsaa her fandtes det oftere omtalte Lag af en stenet Moræneler med mindre afrundede Gnejsblokke.

Den 3die September sloge vi Telt Øst for Kivitût ved Nordenden af Blæsedal, hvorigjennem der til Fods om Sommeren, men navnlig om Vinteren med Hundeslæde, er en let Forbindelse

[1]) De Højder, der ikke udtrykkelig ere betegnede som maalte ved stamphersk Nivellement eller ved almindelig trigonometrisk Maaling, ere maalte med et meget fint Aneroidbarometer fra Browning i London, som ved Kjøbet var forsynet med et Certifikat fra Kew. Desforuden har det gjentagne Gange været sammenlignet med Meteorologisk Instituts Beretninger, idet det i mit Hjem i længere Tid aflæstes regelmæssigt Kl. 8 Fm. Foretager man disse Aflæsninger navnlig om Efteraar og Foraar, hvor Barometersvingningerne ere betydelige, kan man med stor Nøjagtighed faa sit Barometer prøvet paa de omkring Middelstanden varierende 60—70 Millimeter, der jo have mest Betydning. De her i Disko-Fjord angivne højtliggende Terrasser staa rimeligvis i Forhold til de ejendommelige Vandstande, der i sin Tid maa have været i Disko-Fjord, da Brær overalt gik ned deri.

mellem Disko-Fjord og Godhavn. Her træder Gnejsen frem ved Foden af Trapfjeldene, og de isskurede Heller vise, at Isen er kommen fra Fjordens sydlige Arm og er gaaet tvers henover Kivitût-Halvøerne. Det højeste Punkt paa disse er 83 Meter. Ogsaa om dem gjælder, hvad Pjetursson har bemærket om Gnejshalvøen, hvorpaa Godhavn ligger, at de paa Overfladen ere mærkelig fri for løse Blokke, disse ligge, her som der, sammenskyllede i Klipperevnerne. Paa Fjeldskraaningen derimod saas i en Højde af 127 Meter en Terrasse af Moræneler, op over hvilken der ragede en afrundet Klippe, der var stærkt bestrøet med løse Blokke.

For at faa et Overblik over Nordenden af Blæsedal, bestege vi det isolerede Fjeld Igdlorsuausak kaldet, der efter Barometret er 769 Meter højt. Det er som sædvanligt fladt ovenpaa og dækket af leret Grus og Smaasten med et tromlet Udseende. Flere Gnejsrullesten, hvoraf en var 5—6 Kubikfod stor og fuldstændig afrundet, fandtes. I en Højde af en 300 Meter saas en Skydemur til Rensdyr.

Fra Toppen af dette Fjeld saas endvidere, at Dalen, der fortsætter Fjorden, gaar i S. 35° Ø. (misv.). Den nordlige Del af Blæsedal gaar i S. 35° V. (misv.), og omtrent i Midten bøjer den af og gaar i N. 80° V. (misv.).

To Bræer komme paa den nordlige Del af Dalen ned fra Østsiden, hvoraf den nordligste ender nær en lille Sø, og den sydligste gaar ud i en anden lille Sø. Fra Vestsiden saas ikke mindre end 5 Bræer at komme ned ad Fjeldet, hvoraf de og maaske den sydligste er identisk med den saakaldte «Upper Blase Dale glacier»[1]). Elven, der gjennem Dalen løber ud i Disko-Fjord, kommer fra den nordligste Bræ paa Vestsiden; medens Rødeelv, der gaar til Disko-Bugt, synes at komme fra et Par smaa Søer omtrent midt i Dalen.

---

[1]) Se Chamberlin: Glacial Studies in Greenland II. Journal of Geology. Vol. II. 1894. S. 784.

Den 4de September roede vi til Laxeelvs-Dal, den 3die af de Passager, der findes over den Halvø, der begrænser Disko-Fjords Sydside. Ved at ro forbi Fjeldet, der hæver sig over Kivitût, saas det, at der i en «Botn» gaar en lille Bræ ned, til en Højde af c. 350 Meter; men en mægtig Moræne, der gaar lige ned til Vandfladen Vest for denne «Botn», vidner om, at der tidligere, over den nu fuldstændig isfrie Fjeldvæg, maa have gaaet en mægtig Bræ ned; ja og Morænen antyder uden Tvivl en død Bræ, hvad ikke alene dens meget stejle Rand, men ogsaa de vaade Pletter, der saas paa den, ere Beviser for.

For at faa et Overblik over denne Dal, der benyttes meget som Slædevej om Vinteren, da Isen let bryder ved Blaafjeld, bestege vi en Højde paa lidt over 300 Meter. Kun to Bræer saas, og de vare smaa, en paa Vestsiden nær Disko-Fjord og en paa Østsiden nærmere Laxebugt. Bunden af denne Dal ligger lavt, saavidt vi kunde se, var Vandskjellet ved en Sø, der kun laa c. 60 Meter over Vandfladen. Fra denne Sø kommer Laxeelv, der løber ud i Laxebugt, medens to smaa Elve, en fra hver Side, løbe ud i Disko-Fjord.

Fra Laxebugt roede vi den 5te September til Unartok-Fjeld og sloge Telt nær de varme Kilder. Disse bryde frem nær Stranden af den frodige Græsbund og synes, i Lighed med den i Mellemfjord, at komme fra en lille, c. 1½ Meter høj Bakke. Den første Dag, jeg besøgte dem, havde de 3 varmeste en Temperatur af henholdsvis 12°, 11°,3 og 9° C. Efter at det havde støvregnet hele Natten og Dagen, og det samtidigt sneede paa Fjeldene, kunde jeg den næste Dag ikke finde nogen Kilde, hvor Temperaturen var over 7° C. Rink fandt, at Temperaturen i Juni 1849 var 10° R. (12°,5 C.) [1].

I den Fjeldvæg, der fra Unartok strækker sig hen til Bugten ved Maligiak, findes en 7 à 8 «Botner», kjedelformede Fordyb-

[1] Om den geografiske Beskaffenhed af de danske Handelsdistrikter i Nordgrønland. S. 34.

her sit Isdække og flyder ud derover, og naar dette gjentager sig flere Gange, og der samtidig indblandes nyfalden Sne deri, kan et saadant frossent Vand- og Snelag naa en betydelig Mægtighed og i kolde Sommere holde sig i flere Aar. Dette er et overmaade almindeligt Fænomen i Grønland og har i og for sig ikke nogen særlig naturhistorisk Interesse, derimod har det en historisk Interesse, idet det var en saadan Aflejring af Is og Sne, der gav Rink Ideen til hans Theori om Indlandsisens[1]) Dannelse. Se saaledes i; «Om den geografiske Beskaffenhed af de danske Handelsdistrikter i Nordgrønland» i Kgl. D. Vidensk. Selsk. Skrifter 5. R. Bd. III. S. 33 og flere andre Steder.

Skrænten ved Marrarssuit fortsættes mod SØ. i Skrænten ved Igpik, der er bevoxet.

Mellem Marrarssuit og Igdlokunguak ligger den forhen nævnte Husplads Unartok. Her findes en karakteristisk «død» Bræ, hvoraf et Parti af Enden er gjengivet paa Tavle XII. Der saas ikke Spor af Is; men dels Bræens Form, dels Revnerne deri og endelig den Maade, hvorpaa «Bræen», saaledes som Fotografiet viser det, efterhaanden smelter bort og efterlader en Moræne, lod ingen Tvivl tilbage om, at det var en død Bræ og ikke en usædvanlig stor Moræne, man her havde for sig.

Ved Igdlokunguak besøgte jeg, efter 27 Aars Forløb, atter den mærkelige Basaltgang med den store Magnetkies Klump, som jeg fandt i 1871[2]). Stedet var forsaavidt uforandret som

[1]) Angaaende Oprindelsen til dette Navn har Dr. Rink meddelt mig, at han ved sin Hjemkomst fra Grønland i 1851 var uvis om, hvad han skulde kalde Landets almindelige Isbedækning, da kaldet «Isblinken», til Forskel fra Halvøernes og Øernes Islag, og da han i den Anledning spurgte Forchhammer og Jap. Steenstrup til Raads, skal den sidstnævnte have foreslaaet ham Navnet Indlandsisen.

[2]) Se Vidensk. Meddel. fra den naturh. Foren. i Kjøbenhavn. 1875. S. 304. Den egentlige Finder er den nu afdøde, daværende Udligger Fritz Jørgensen i Ujaragsugsuk, der som ivrig Jæger havde et skarpt Blik for Naturen og hvem Samlingerne skylde saa mange udmærkede Planteforsteninger. Professor Nordenskiöld besøgte Stedet, paa Jørgen-

Basaltgangen endnu stod frem af Sandlagene, der op ad Gangen ere hærdnede til smukke kantede, indtil 1 Fod lange Søjler, hvis Længderetning er lodret paa Gangen. Derimod var Magnetkies-

sens Opfordring, i 1870 og har i sin «Redogörelse» omtalt det paa følgende Maade: «Märkvärdigt är att Giesecke under sina mångåriga resor i Grönland ej träffade några meteorjernstycken. Deremot omnämner han, att ofantlige bollar af jernkis träffades i basalt-formationens sandlager. Äfven vi funno några sådana kisbollar ett par hundrade fot öfver hafvet, emellan Ujarasusuk och Kudliset. De voro ända till 3 à 4 fot i genomskärning, klotrunda och lågo lösa i sanden, straxt invid en basaltgång. Dock innehöllo de ej pyrit utan ett ännu ej analyseradt magnetkislikt mineral af ganska egendomligt utseende». (Öfvers. af K. Sv. Vetensk. Akad. Förhandl. 1870. S. 1070)

Denne Magnetkies er senere bleven analyseret af Lawrence Smith med følgende Resultat:

Svovl	36,85
Jærn	53,01
Kobber	2,43
Nikkel	3,11
Kobolt	0.78
Phosphor	0,42
Uopløst Rest	3,20
	99,80

Se hans Afhandling: Memoire sur le fer natif du Groenland et sur la Dolérite qui le renferme; i Annales de Chemie et de Physique, 5e série, t. XVI. 1879.

Man kunde maaske synes, at det er mærkeligt, at jeg efter denne Beskrivelse med Bestemthed tør identificere Professor Nordenskiölds kuglerunde, 3—4 Fod i Diameter store Kisboller, der angives at stamme fra Sandlagene, med den mange Kubik Meter store Magnetkies-Masse, jeg fandt siddende i en Basaltgang; men ikke desto mindre er det Tilfældet. Fritz Jørgensen ledsagede mig nemlig i 1871 hele Vajgat rundt for at paavise mig, hvor der fandtes Kul, og for øvrigt for at være mig til Hjælp, takket være daværende Inspektør Krarup Smiths fortrinlige Anordning.

Da vi paa vor Tur kom til Atanikerdluk (eller Patoot), fik jeg, umiddelbart ved Landingsstedet, Øje paa nogle mærkelige metalglindsende Mineralstykker og efter at have betragtet dem lidt, udbrød jeg uvilkaarlig for mig selv: men hvor er dog den mærkelige Magnetkies fra. Jørgensen kom nu til og sagde med en pudsig Sikkerhed: aa, det er ikke andet end Magnetkies, men det har ingen Værdi. Forbauset over denne Sikkerhed spurgte jeg ham, hvorfra han havde den Lærdom, og han fortalte da, at han ved Kulgravning ved Igdlokunguak var bleven op-

Ogsaa her bestemtes Tangranden, idet det fandtes, at denne laa 3,2 Meter under: «Den største og sydligste af de to Ringbolte (Enden af den Stang, hvori Ringen sidder) ved Spækhuset». Denne Ringbolt ligger ud for Døren paa Sydsiden af Huset [1]).

I Lyngmarken hente Grønlænderne en Smule Kul og saavidt det for Sne kunde ses, laa det i en grov glimmerholdig Lerskifer, og Træstykker fandtes i en arkoseagtig Sandsten, lig den der ovenfor er omtalt i Disko-Fjord. — Højden over Vandfladen var 90 Meter.

Angaaende en Bræ i Tuaparsuit Kløft lige over for Godhavn, har Hr. Løjtnant Carstens meddelt mig Følgende: Han besøgte den første Gang den 19de September 1890 og anslog da, at Enden af den laa i en Højde af 200—250 Meter og at den havde en Bredde af c. 150 Meter. Den havde endvidere en ikke ubetydelig Midtermoræne. For senere at se, om Brænden flyttede sig, byggede han en Varde, der var overet med Enden af Bræen og med en karakteristisk Fjeldspids paa den anden Side. Akkurat Aarsdagen derefter besøgte han Bræen igjen og fandt da, at den i det forløbne Aar havde trukket sig 46 Meter tilbage. Denne Gang markerede han Bræenden ved at male et meterhøjt Kors med Mønje paa den lodrette Fjeldside.

Efter at «Tjalfe» den 23de September havde gjort et forgæves Forsøg paa at gaa ud af Havnen, men maattet vende om, kom vi ud den 26de, og efter paa Hjemvejen at have foretaget de samme Bestemmelser af Havvandets Farve og Indsamlinger af Plankton, som paa Udrejsen, kom vi til Kjøbenhavn den 2den November.

Følgende Bredde-Observationer, der kunne have Betydning for fremtidige kartografiske Arbejder, anføres her:

---

[1]) Efter min Opfordring havde Lieutn. Frode Petersen i 1897 foretaget en lignende Bestemmelse. M. o. G. XIV. S. 346.

var mig ubegribelig, troede jeg, at det kun var et Paaskud for, at de ikke havde Lyst til denne Tur; men uagtet jeg bød højere Betaling end sædvanlig, fik jeg stadig det samme Svar, at det var umuligt. Da jeg saa besluttede at gaa alene, tilbød Udliggeren, at et Par af hans Smaabørn maatte følge med, med den lidt ejendommelige Motivering, at de muligvis vare saa lette, at den stivnede Lerstrøms Overflade kunde bære dem. Da jeg kom til Stedet, fik jeg virkelig fuld Bekræftelse paa, at Grønlændernes Udsagn om Lerstrømmen var rigtig: En kaotisk Blanding af Ler og opblødt Basalttuf var som en «Dyndstrøm» brudt ned ad Fjeldet, medførende paa sin Overflade vældige Basaltblokke og stod som et lille Forbjerg helt ude i Vandet, der i lang Afstand var farvet af Ler. Det havde sine Vanskeligheder med at passere denne Lerstrøm, idet vi maatte balancere fra Sten til Sten for ikke at synke ned i Leret. Børnene kom let over, medens jeg gjentagne Gange sank i til højt op paa Benene. Hvilket Forhold denne Lerstrøm stod i til den «døde» Bræ, et Begreb, jeg forøvrigt ikke dengang kjendte, kan jeg ikke nu afgjøre; men at det er et Fænomen, der har Betydning ved Studiet af de orografiske Forhold, er utvivlsomt.

Ved Udstedet Ujaragsugsuk havde jeg i 1880[1]) forsøgt at bestemme Forholdet mellem Vandstanden og et bestemt Mærke, for at man derefter senere kunde have et Middel til at dømme, om Vandstanden forandredes. Denne Methode, at bestemme et Mærkes Forhold til en løselig opgiven Bestemmelse af Vandstanden, selv om denne stammer fra de med Forholdene paa Stedet mest fortrolige Folk, maa imidlertid anses for mindre paalidelig, hvorfor jeg ogsaa denne Gang forsøgte at anvende en Methode, der tillod en større Skarphed, altsaa en Methode, der hurtigere kunde bringe et Resultat. Som ovenfor angivet ved Kutdlisat, bestemte jeg denne Gang enten Blæretangens øverste Grænse eller ogsaa Balanernes øverste Grænse, hvad

[1]) Meddel. om Grønland. IV. S. 241.

udmærkede Instrumenter. Rohdes Kort blev publiceret i Petermanns Mittheilungen for 1874 og Hammers i M. o. G. IV, foruden at det blev indlemmet i Søkortarkivets forskellige Kort over Grønland. Paa vor Rejse i 1880 tegnede Løjtnant Hammer endvidere Vajgats Kyster. Efterhaanden som vi kom

frem tegnede han nemlig det tilsvarende Stykke af den modstaaende Kyst. At tegne den Kyst, langs med hvilken vi rejste, vilde være umuligt paa Grund af Fjeldenes Højde og Stejlhed i Forbindelse med Kystens ringe Bredde. Diskos Nordøst-Kyst er derefter gjengivet paa Tavlerne XVIII og XIX og neden under er angivet, fra hvilke Punkter paa Nugsuak-Halvøen de enkelte Partier ere sete. Da Kysterne krumme, og det af forskjellige Grunde

taget at være de samme som da de ovennævnte Forfattere undersøgte dem, og nogen større Forandring var i den korte Tid heller ikke at vente af saa smaa Bræer. Pjetursson mente at kunne paavise, at den sydligste har trukket sig tilbage siden Chamberlin i 1894 besøgte den, og ved min Eftermaaling af Lieutn. Frode Petersens Vinkler var ligeledes en ringe Tilbagegang paaviselig for det forløbne Aar[1]). Isen i Enden af denne Bræ havde en mærkelig sørgrøn Farve, som jeg ikke erindrer at have set hos nogen anden Bræ.

Den 17de August afrejste vi med en Storbaad til Disko-Fjord og efter ved Udstedet Erkigtok at have faaet en Konebaad, sloge vi den 19de om Aftenen Telt ved Iginiarfik, paa Vestsiden af Mundingen til den Bugt, der gaar ind til Overgangsstedet til Mellemfjord. I en lav c. 3 Meter høj Skrænt af stenet, blaat Ler, der i høj Grad mindede om det stenede Yoldialer i Vendsyssel, fandtes en Del Skaller, dels lukkede, dels aabne af følgende Dyr: *Pecten islandicus* Müller, **Portlandia (Yoldia) arctica* Gray, *Leda pernula* Müller, *Nucula tenuis* Montagu, *Cardium groenlandicum* Chemnitz, *C. ciliatum* Fabricius, *Axinus flexuosus* Montagu, *Tellina calcaria* Chemnitz, **Saxicava arctica* Linné, **Mya truncata* Linné, *Mya truncata* var. *ovata*. (De med Stjerne betegnede ere overvejende i Antal.)[2])

I den stejle Fjeldskrænt her saas et Basaltlag, der som en udpræget Lavastrøm var flydt ud over en rød tufagtig Mandelsten. I denne sidste fandtes, paa Spalter og i smaa Hulrum, en Del Zeolither som: Chabasit, Phacolith, Lewyn, Heulandit, Desmin og Analcim, foruden haarfine Zeolither; men de vare, som sædvanlig her i Grønland, kun smaa.

Den næste Dag kom vi ind i Bunden af Bugten. Paa Hammers Kort fra 1880 er Stedet kaldet Talutarfik, men efter de Grønlænderes Sigende, jeg havde med i Aar, hedder Stedet

[1]) Commission international des Glaciers. Quatrième Rapport 1898. S. 100. (Archives des Sciences physique et naturelles. t. VIII. 1899.)

[2]) Bestemte af Cand. mag. Ad. Jensen.

Kagsimavik, medens Talutarfik skal være det tilsvarende Sted Bunden af Mellemfjord. Da de Grønlændere, jeg havde me[illegible] i Aar, vare fra selve Disko-Fjord, er deres Angivelse uden Tvi[illegible] rigtig. — Medens Grev Moltke blev tilbage ved Teltet for at tegne Bræer (Cand. Morten Pedersen var bleven tilbage ved Udstedet, for i Nærheden deraf at undersøge Floraen paa det blandede Gnejs- og Trap-Terrain), gik jeg med 3 Grønlændere, der bare et lille Telt og Proviant, over i Mellemfjord. Om Foraaret, før Isen bryder i denne Fjord, gaa Grønlænderne fra Disko-Fjord her over Land for at slaa Sælhunde, der ofte i store Mængder skulle blive liggende tilbage paa Isen og den lerede Bund, naar Vandet ved Ebben trækker sig tilbage. Da skal der paa dette Overbærested, kunde man gjerne kalde det, være store Masser af Sne, der lægge betydelige Hindringer i Vejen for Passagen. Nu, da al Sneen var borte, var der ingen Vanskeligheder ved at komme frem, i det Mindste Halvvejen, til Højderyggen var passeret, derfra og til Mellemfjord blev Dalen sumpet, saa der ofte maatte gaas Omveje og vades over Elve, ligesom det var trættende at gaa paa den mosede Bund, der gav efter for hvert Skridt. 5 Bræer komme fra Fjeldene paa Sydsiden af Dalen Øst for Vandskjellet [1]). Dette ligger nærmest Disko-Fjord og Højden er omtrent 200 Meter. Paa Nordsiden af Dalen kom ogsaa en Bræ ned; men denne naar ligesaalidt som de andre ned i denne, de naa kun Halvdelen ned ad Fjeldene. Efter at have passeret Vandskjellet ses der i næsten hver eneste Kløft i Fjeldene paa Sydsiden smaa Bræer, der synes at være hendøende; thi de ere næsten helt bedækkede med Morænemasser. Paa Nordsiden er et Par større Dale, i

[1]) De fotograferedes, men disse Fotografier ere af forskjellige Grunde, ligesom en Del Fotografier af andre Bræer, ikke reproducerede. Da Pladerne naturligvis opbevares, vil det jo imidlertid være let, til fremtidige Sammenligninger, at forskaffe sig Kopier deraf. Tavle XVII, Fig. 2 er et Fotografi af en Tegning af Greve Moltke af den østligste af disse Bræer, der næsten gaar hen til Kagsimavik, hvorfra den ses meget tydeligt.

Tavle IX.

Nordkysten af Disko mellem Isunguak og Nugarsuk.

Fjeldet til Venstre er Isunguak, og det spidse Fjeld i Midten Ingisok. Odden, hvorfra Billedet er taget, er Nugarsuk. Begge Fjelde ere omtrent lige høje, c. 875 Meter. I den lave Skrænt ved Vandet ere de kulførende Dannelser blottede, og da Skiferen her ved Isunguak er meget tilbagetrængt, bestaar den vistnok udelukkende af Sand og Sandsten. Smaa Basaltgange, mere eller mindre lodrette, ere almindelige heri. Den jævne Skraaning, der ses derover, er svagt bevoxet og dækket af det i Texten oftere omtalte tynde Lag af Moræneler med Grundfjelds-Blokke. De stærkt hvide Partier er de i de utallige Kløfter blottede Sand- og Sandstenslag. Heri optræder Basalten som mægtige horizontale laglignende Gange, saaledes som det ses paa Isunguak og under Spidsen af Ingisok. Øverst ligge Traplagene, men deres nedre Grænse er usikker, da den skjules af mægtige Masser af nedstyrtede Basaltblokke; og allerøverst dækker Firnen Toppene og udjævner Lavningerne.

Grønland fra 1783 [1]), der for Julianehaabs Distrikts Vedkommende igjen er en Kopi af Andreas Bruuns Kort fra 1780 [2]). Det Kort, han gav Scoresby [3]) over Disko-Bugt, er i det Store og Hele kopieret efter Olavsens ovennævnte Kort fra 1783, med Undtagelse af Øen Disko. Denne Ø er nemlig her omtrent tegnet som paa Kortet, der ledsager Afhandlingen: On the Mineralogy of Disco Island; eller snarere ere de vel begge to kopierede efter et Kort, en eller anden Dansk eller Grønlænder har tegnet til ham. Endnu er det ikke lykkedes mig at paavise Originalen dertil. Kysten fra Godhavn til Fortunebay og navnlig Godhavns Halvøen er godt tegnet, derimod ere de øvrige Kyster meget fortrukne og Fjordene, særlig paa Scoresby-Kortet, gjort uforholdsmæssig store.

Naar Giesecke anslaar Overgangsstedet mellem Disko-Fjord og Mellem-Fjord til at være 5 Mil bredt, da er dette en stor Overdrivelse, Bredden er næppe 2 Mil. Paa Hjemturen, da vi saa vidt mulig gik i en lige Retning, viste Skridttælleren, at jeg havde gaaet 24000 Skridt. En terrasselignende Aflejring her ved Kagsimavik havde en Højde af 89 Meter.

Den næste Dag gik vi ind i Bunden af denne Fjordarm, hvori der gaa flere Bræer ned [4]). En stor Bræ gaar saaledes ned i Dalen tilhøjre, og dens Afstand fra Vandfladen skulde, efter den senere udregnede trigonometriske Maaling, være c. 13000 Meter, hvilket jeg efter Øjemaalet ikke vilde have troet, den syntes betydelig nærmere. Fra Dalen til venstre skal man kunne komme ned midt paa Overgangsstedet til Mellemfjord,

---

[1]) Bibliographia Groenlandica. S. 223. Nr. 85*.
[2]) Samme Sted Nr. 82*.
[3]) Journal of a Voyage to the Northern Whale-Fishery. Edinburgh. 1823.
[4]) Saavel af disse Bræer som af en Del andre have vi Fotografier og Tegninger, der af forskjellige Grunde ikke ere blevne reproducerede her i Bogen. Ved fremtidige Undersøgelser kan der dog tages Kopier deraf, for at det paa Stedet kan blive undersøgt, om der i den forløbne Tid er foregaaet nogen Forandring

hvilket en Grønlænder fortalte, der havde villet se efter, om Rensdyrene virkelig vare forsvundne fra denne Egn.

Herfra satte vi om Eftermiddagen over til Østenden af Ketertak, hvor vi sloge Telt ved nogle gamle Husrester, som vore Grønlændere kaldte Kuinguak, men som maa være det samme Sted, Rink kalder Igdlunguak [1]). Denne Ø, der er c. 600 til 650 Meter høj, har meget stejle Vægge og, efter Grønlændernes Sigende, var dette det eneste Sted, hvor det var muligt at komme op oven paa den.

Ved Bestigningen saas det samme stenede Moræneler, som træffes langs Vajgats Kyster og her i Disko-Fjord. Indtil en Højde af c. 90 Meter fremtraadte dette som et bestemt Lag paa Skraaningerne, dog ogsaa herover, lige til Øens svagt bølgede Overflade, fandtes det som et tyndt dækkende Lag, og overalt laa der spredt en Mængde større og mindre afrundede Blokke af Grundfjeldet. Blandt disse bemærkedes hvid Glimmerskifer og grøn Straalstenskifer. En hovedstor Blok af ren hvid Kvarts tiltrak sig ogsaa Opmærksomheden. Overfladen var, som sædvanlig under saadanne Forhold, som tromlet og Stenene ordnede i Render efter Vandets Løb. Fast Basalt eller Mandelsten traadte ikke frem; men hvor Overfladen dannedes deraf, var Bjergarterne opløste og søndersprængte i større og mindre skarpkantede Brudstykker.

Paa Hammers Kort over Disko har jeg antydet en lille død Bræ paa Nordsiden af Øen, efter hvad jeg under Forbironingen langs den modstaaende Kyst i 1880 troede at have set. — Nu stod jeg oven paa Øen ved Randen af den stejle brede Kløft, der foroven er delt i to Arme, og i hvis nedre Ende den døde Bræ synes at ligge. De uhyre Morænemasser, der som en Odde gaar ud i Vandet, synes nemlig, efter Formen at dømme, endnu at maatte indeslutte en Iskjerne. — Kløftens

[1]) Her sigtes ikke til hans bekjendte Kort over Nord-Grønland, men til et lille Specialkort over Disko-Fjord, som han optog i 1849, og som er trykt ved Godthaab 1859. M. o. G. XIII. S. 229. Nr. 156.

to øvre Arme udmunde i en Lavning, der gaar tvers over Øen, og i denne Lavning laa der endnu saa sent paa Aaret Sne og, saa vidt det for Taage kunde ses, var dette den eneste Sneplet paa Øen. Denne markerede altsaa den Firn, der i sin Tid bedækkede Øen og som sendte den omtalte Bræ ned ad Nordsiden.

Den 24de August kom vi tilbage til Udstedet Erkigtok. Paa Grund af Norden Kuling med Sne maatte vi vente her et Par Dage. Ved Udstedet er Grænsen mellem Trap og Gnejs, idet selve Husene ligge paa Trap, medens Sydsiden af Havnen er Gnejs. I denne Gnejs er der store Partier af hvid Kvarts, hvis Optræden minder om Spalteudfyldninger. Magnetkies maa ogsaa forekomme deri, da jeg modtog et større Stykke af en Grønlænder. Bunden af denne Fjordarm, der kaldes Kangerdluarsuk, dannes af Gnejskuller, og pletvis Basalt eller Mandelsten. Ingensteds saas den fra Godhavns Omegn bekjendte Tuf.

Den 27de August rejste vi herfra for at undersøge Disko-Fjords østlige Arme. Paa Vejen lagde vi til Land ved et Sted kaldet Nangisat. Dette Navn hidrører fra den Række store Sten, der, som omstaaende Billede viser, findes oven paa en stenet Havstok og kommer af det grønlandske Ord nangivok: gjør et Hop paa et Bén. Efter Kleinschmidts Ordbog er nangisat Pluralis og betegner: «store Sten, som paa flere Steder findes liggende paa slet Mark i en Række med ikke ubetydelige Mellemrum, og som af Sagnet tilskrives Islænderne, der skulle have lagt dem for at springe paa dem Rækken til Ende paa eet Been». — Saadanne Nangisat har jeg set et Par Steder til, saaledes ved Ekorgfat i Umanak-Fjord, hvor den havde Form af et Kors, og et lignende Kors synes Giesecke at have set i Unartok-Fjord i Julianehaabs Distrikt (Dagbog. S. 168), dog uden at tyde det som en Nangisat. Medens Kleinschmidt henfører dem til de gamle Islændere, synes Giesecke at mene, at de hidrøre fra en af Eskimoernes tidligere Lege, men som kort før hans Tid er gaaet af Brug (Dagbog. S, 323). Hos de tidligste Forfattere, som Egederne og Crantz, erindrer jeg

i hvis 3 Kløfter der ligge Bræer. I den nordligste synes Bræen kun at gaa ned til en Højde af c. 400 Meter. I den mellemste gaar Bræ-Enden som en fuldstændig dækket Bræ næsten ned lige til Vandfladen. For Øjeblikket syntes den endog at være i Fremgang, da den syntes at skyde ud over den mosbegroede Ende af Deltaet, som Bræelven havde dannet, da Bræen var mægtigere end nu. Den udækkede Del af Bræen gaar ned til en Højde af c. 250 Meter fra Vandfladen. I den sydligste Kløft endelig standser en Bræ i en Højde af c. 300 Meter. Akuliarusersuak naar en Højde af c. 900 Meter og er bedækket af en betydelig Firn, hvorfra de ovennævnte 3 Bræer have deres Udspring.

Karusuit betyder Hulerne, saaledes kaldes nemlig den Strandlinie, der her er under Dannelse i Tufen. Paa Grund af dennes noget uensartede Beskaffenhed udhules den af Bølgeslaget forskjelligt, og ved Lavvande kan man gaa ind i disse Huler og søge Zeolither, saaledes som allerede Giesecke gjorde. Zeolitherne ere væsentligst Analcim, Desmin, Apophyllit, Heulandit og Chabasit, foruden finstraalede Zeolither. Lige herover for, paa Nordsiden af Fjordarmen, ligger en lignende Skrænt af Tuf, hvorfra Giesecke ligeledes har smukke Zeolither. Stedet hedder Tarajungitsok. Giesecke siger, at Navnet hidrører fra, at Vandet her er fersk paa Grund af det meget Elvvand, der her flyder ud i Fjorden. De Grønlændere, jeg havde med, sagde, at Navnet hidrørte fra det Salt, der afsatte sig paa Stenene i et lille Vandløb, der kom fra en Kilde c. 100 Meter fra Stranden. Temperaturen i Kilden var 12° C., og Saltet viste sig senere, efter en Analyse af Cand. Chr. Winther, at være Gips[1]). Mærkeligt er det, at Giesecke, uagtet han flere Gange var paa dette Sted, ikke omtaler denne smukke Efflorescens, der absolut

[1]) Hr. Pastor Chr. Rasmussen har velvilligst meddelt mig, at tarajungitsok betyder: det, som ikke er salt. Om nu Navnet, som Giesecke mener, kommer af, at Fjordvandet her ikke er salt, eller det kommer af, at de saltlignende Gipskrystaller ikke smage salt, maa staa hen til en Sprogkyndig kommer til Stedet.

maatte tiltrække sig Opmærksomheden; man kunde derfor næsten fristes til at antage, at den i hans Tid ikke existerede.

Mellem Tarajungitsok og Elven Kugsuak er en lille Odde bestaaende af Gnejs, der er mærkelig derved, at Grænsen mellem denne og den dækkende Tuf er skarp og tydelig. Gnejslagene staa lodret og dækkes af en arkoseagtig Sandsten med store Gnejsrullesten, der rage op i Tufen.

Den 28de August om Aftenen sloge vi Telt i Kvannersuit, omtrent der, hvor Bugten løber tør ved Lavvande. Ogsaa her er det stenede Moræneler med Skaller fremtrædende.

Denne Fjordarm er c. 1700 Meter bred og ender i et fladt Delta, der er dannet af den brede, stærkt rødfarvede Elv, der kommer fra Bræerne, der opfylde Enden af Dalen. Dennes Sider bestaa indtil en Højde af c. 400 Meter af Tuf, hvorover der kommer den regelmæssige Trap. Retningen af Dalen er paa den første halve Mil i N. 50° Ø. (misv.). Paa denne Strækning kommer der fra Vestsiden ingen Bræer ned, derimod kommer der fra Østsiden to smaa Bræer, der ende i Højder paa c. 300 Meter over Vandfladen; men nedenfor begge synes der i Klofterne at ligge «døde» Bræer helt ned til og ud i Dalbunden. Navnlig den anden fra Syd har pragtfulde halvmaanedannede Morænevolde, der uden Tvivl endnu ere isfyldte. Endelig kommer der fra samme Side en 3die noget mægtigere Bræ ned, der først synes at gaa tvers over Dalen, før den bøjer om i Dalens Retning. Samtidig synes den at faa Tilløb fra Vestsiden, at domme efter de mægtige Tværmoræner, der ses at gaa over den. I denne Dal fandtes, foruden et Renshorn ogsaa en af de sædvanlige Skydevolde: en i Regelen halvmaanedannet, lav Stenvold, bag hvilken Jægeren afventede, at Rensdyrene passerede forbi.

Da det nu allerede var sent paa Aaret, saa Snebyger og Taage hindrede længere Udflugter, maatte vi afstaa fra at undersøge denne Dal nøjere; men at den ligesom alle de andre, vi havde set, var aflukket med en Bræ, var sikkert nok, saa nogen

Tavle XI.

Den jærnførende Andesit ved Asuk.

Den nederste Halvdel af Billedet indtages af en ejendommelig Tuf, hvori der er en Mængde Brudstykker af den jærnførende Andesit. Herover følger en i smukke Søjler afsondret Basalt, der som en Gang har presset sig ind, dels gjennem Tuffen og dels imellem denne og et Lag af den jærnførende Andesit, hvoraf der øverst ses enkelte tilbagestaaende Partier. Hele Skrænten er paa dette Sted omtrent 40 Meter høj.

K. J. V. S. fot. Fototypi: Pacht & Crone.

Jærnførende Bjergart. Asuk. Vajgat.

Tavle XII.

Enden af den døde Bræ ved Unartok i Vajgat.

Tvers over Billedet ses Enden af Bræen fuldstændig dækket af Morænemasser. Midt i Billedet, lidt til Venstre, ses den virkelige Moræne, der bliver tilbage, naar Bræen smelter bort.

K. J. V. S. fot. Fototypi: Pacht & Crone.

En „død" Bræ. Unartok. Vajgat.

Tavle XIII.

Fig. 1. *Trapfjeld ved Erkigtok i Disko-Fjord.*

Billedet er typisk for det Udseende, Trapfjeldene have i den sydlige og østlige Del af Disko. Det er afvexlende Lag af en tæt Basalt og en mere porøs, oftest rød Mandelsten, adskilte ved en rød Ler, formentlig opstaaet ved Mandelstenens Forvittring. Disse Lag ligge oftest horizontalt. Fjeldet er c. 700 Meter højt.

Fig. 2. *Najanguit, Fjeld af Basalttuf ved Kuganguak, Vajgat.*

Dette lille Maagefjeld, der ligger paa Østsiden af Kuganguak-Dal, bestaar af Basalttuf, og dets Udseende er karakteristisk for Fjeldene paa Diskos Vestside. Tuffen bestaar af en haard, ensformig, conglomerat eller breccieformet Masse med et bænket Udseende, og disse Bænke vise ofte Fald i forskjellig Retning. Fjeldet er c. 450 Meter højt.

1.

2.

K. J. V. S. fot. Fototypi: Pacht & Crone.

1. Trapfjeld. Erkigtok. Diskofjord.
2. Fjeld af Basalttuf. Kuganguak. Disko.

Tavle XIV.

Fig. 1. *Lagdelt Moræneler. Kutdlisat, Vajgat.*

Som oftere omtalt i Texten, findes der paa de flade Skraaninger langs Kysterne en moræneleragtig Masse med Rullesten, hvoraf mange af Grundfjeldet; disse ere fremmede for denne Del af Disko og maa hidrøre fra Fastlandet mod Øst og maa være bragte med Isen, da denne gik ud gjennem Vajgat og Sønden om Disko. I Lokalmoræenerne, der stamme fra de nu eller i tidligere Tid fra Disko selv kommende Bræer, findes aldrig Rullesten af Grundfjeldet.

Fig. 2. *Kryokonit-Huller paa Kutdlisat-Bræ.*

Ved Kryokonit betegnede A. E. Nordenskiöld i sin Tid de fine Lerpartikler, der samle sig i Lavninger og Huller paa Indlandsisen. Disse sidste have ofte en meget regelmæssig og karakteristisk Form. Naar det paa Billedet ser ud som om deres Retning var radiær og ikke lodret paa Overfladen, da hidrører dette fra en Ufuldkommenhed ved Fotograferingen. Hullerne vare dybe og smalle, saa det var nødvendigt at stille Apparatet næsten lodret over dem, og da Afstanden jo kun kunde være kort, fremkom det fortrukne Billede.

1.

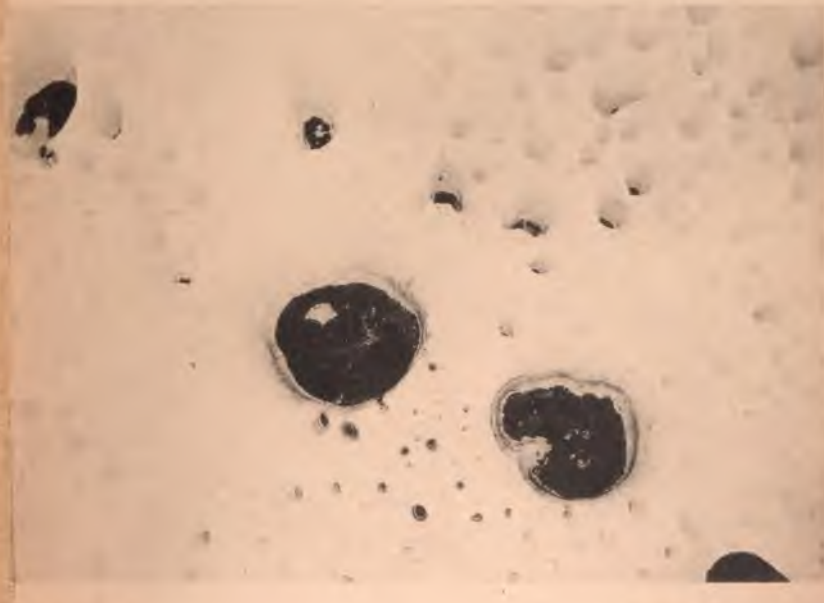

2.

K. J. V. S. fot. Fototypi: Pacht & Crone.

1. Lagdelt Moræne. Kutdlisat. Vajgat.
2. Kryokonit Huller. Kutdlisat Bræen.

Tavle XV.

Fig. 1. *Bræ i den fjerde Botn (fra Øst) i Fjeldet over Unartok i Disko-Fjord.* Se Side 300.

Fig. 2. *Bræ ved Kugssuak mellem Sinigfik og Puilasok paa Sydsiden af Disko.* Se Side 283.

Tavle XVI.

Fig. 1. *Den sydligste Bræ paa Skarvefjelds Østside.* Se Side 284.

Fig. 2. *Den næstsydligste Bræ paa Lyngmarksfjelds Østside.* Se Side 284.

Fig. 3. *Enden af den sydligste Bræ paa Lyngmarksfjelds Østside.* Se Side 284.

1.

2.

3.

K. J. V. S. fot. Fototypi: Pacht & Crone.

1. Bræ ved Itivdlek. Skarvefjeld. Disko.
2. Den næstsydligste Bræ paa Lyngmarksfjeld. Disko.
3. Den sydligste Bræ paa Lyngmarksfjeld. Disko.

Tavle XVII.

Fig. 1. *Kutdlisat-Bræ. Vajgat.* Tegning af H. Moltke. Se Side 266.

Fig. 2. *Bræ ved Kagsimavik. Disko-Fjord.* Tegning af H. Moltke. Se Side 286.

Fig. 3. *Fjeldparti med Bræer. Højlandet indenfor Flakkerhuk.* Tegning af H. Moltke. Se Side 262.

1.

2.

3.

H. Moltke del. Fototypi: Pacht & Crone.

1. Bræ ved Kutdlisat. Vajgat.
2. Bræ ved Kagsimavik. Diskofjord.
3. Fjeldparti ved Flakkerhuk. Disko.

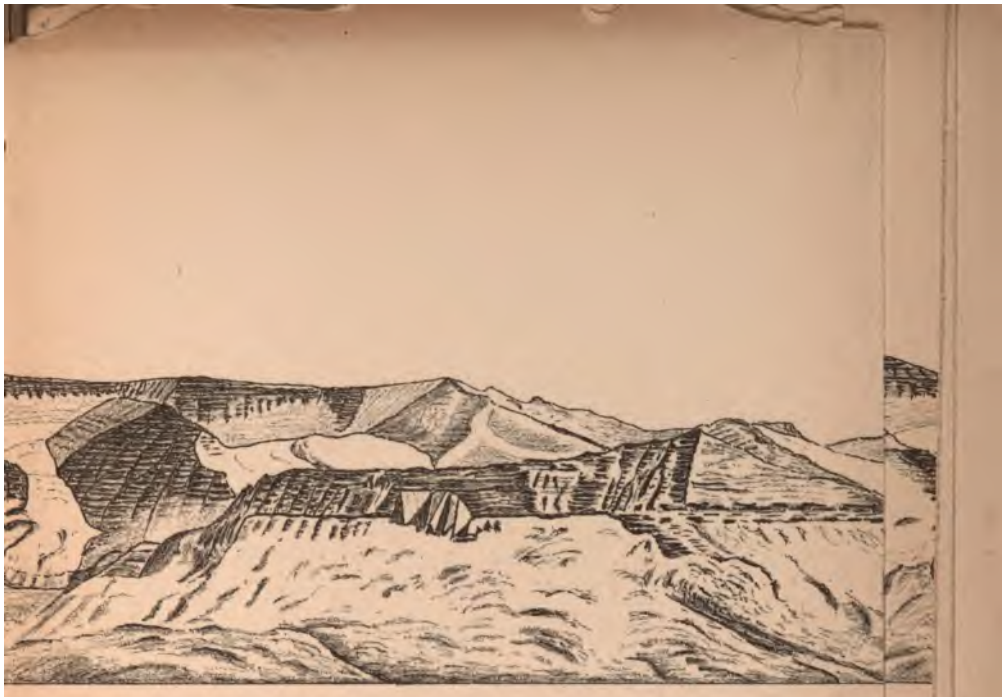

Disko fra Ritenbenks Kulbrud til Asuk

Disko fra Asuk og vestefter, set fra A

s

.lia

R. Hammer del.

raks

et fra

ua

raks .

et fra

tua

agsugsuk, set

arsak, set fra

Kulbrud, set

IV.

Résumé

des

Communications sur le Grönland.

Voyage de Disco en 1898

par

K.-J.-V. Steenstrup.

Vingt-Quatrième Partie.

Voyage de Disco, en 1898.

Par

K.-J.-V. Steenstrup.

Durant l'hiver de 1897—98, la *Commission dirigeant les recherches géologiques et géographiques du Grönland* décida que je consacrerais l'été de 1898 à parcourir les littoraux sud et nord-est de Disco pour étudier l'état des glaces de cette île et surtout pour chercher s'il y aurait là des vallées exemptes de glace, sillonnant d'assez grandes parties du terrain. J'y fus accompagné par MM. le Dr Morten Pedersen, botaniste, et le comte Harald Moltke, peintre.

Nous partîmes de Copenhague le 7 mai à bord du *Thorvaldsen*, trois-mâts de la Société Royale du commerce grönlandais, commandé par le capitaine Jul. Jensen, et après une longue traversée nous abordâmes à Godhavn le 28 juin.

J'utilisai, comme auparavant, cette traversée en étudiant la couleur de l'eau de la mer[1]). Dès 1874, je m'étais assuré que le seul moyen sérieux de réaliser ce genre d'observations était d'employer une lunette à eau, formée d'un long tube dont le bas est fermé par une plaque de verre et que l'observateur plonge plus ou moins dans l'eau suivant l'intensité de la lumière du jour, ce qui écarte tout éclairage latéral et fait que la couleur aperçue à travers le tube émane exclusivement de la lumière qui a traversé l'eau. Cela met également à même de produire une surface colorée invariable, exempte

[1]) *Vid. Medd. fra den naturhist. Forening i Kbhvn.* (Communications scientif. de la Soc. d'hist. natur. de Copenhague) 1877—78, p. 209; *Communic. sur le Grönland*, V, p. 4.

des inquiétudes et influences de la réflexion, de la polarisation et autres facteurs étrangers à la question [1]), inséparables d'une observation où l'on se borne à examiner la couleur à travers des ouvertures n'atteignant pas la surface de l'eau. Mon tube avait environ 4 mètres de long, et je l'installais de manière à pouvoir aisément le plonger du pont et multiplier à volonté les observations.

En 1874—78, j'employais des cartons colorés pour définir la couleur; mais, soit parce que les tons clairs de l'eau et les couleurs mates peintes sur le papier concordaient trop mal, soit qu'il y eût des intermittences dans la série chromatique des divers cartons, il fut impossible de déterminer avec un peu d'exactitude la nuance des couleurs. Je résolus donc d'employer la fameuse échelle chromatique du professeur Forel; mais elle aussi, on le sait, n'est point exempte du défaut de continuité. Je songeai alors que sur le lieu d'observation il ne s'agissait pas de comparer la couleur de l'eau avec une échelle chromatique déterminée, opération réservée pour le calme et les facilités du laboratoire: le point important était de trouver un moyen de fixer la nuance chromatique observée dans la lunette à eau, et je cherchai à y parvenir en combinant des plaques de verre différant de couleur. Je me procurai chez un vitrier un certain nombre de ces plaques présentant une suite de nuances qui, partant du bleu clair, passaient par le bleu-vert et le vert, et se terminaient au jaune. Coupées en rectangles d'environ $0^m,06$ sur $0^m,025$, ces plaques portaient des numéros d'ordre. Au début j'avais une grande quantité de verres, mais au fur et à mesure de mes recherches je constatai qu'une douzaine ou une quinzaine suffisaient complètement à reproduire toutes les couleurs de l'eau. La figure

[1]) MM. Nordenskiöld (*Expedition till Grönland 1870*, p. 986), Hartz (*Communications sur le Grönland* XV, p. 28), Vanhöffen (*Drygalskis Grönlands-Expedition* II, p. 319) et plusieurs autres auteurs parlent d'une nuance brunâtre des eaux du détroit de Davis; mais j'en conclus qu'elle n'existe point dans ces eaux; du moins est-il certain qu'il y a une grande différence suivant que le regard plane sur l'eau ou y plonge, et qu'on la regarde à travers la lunette à eau. Aussi, à l'entrée du détroit de Davis, le 10 juin 1890, par 59° 19′ lat. N. et 50° 30′ long. W., nous constatâmes qu'effleurée du regard l'eau présentait une teinte d'un jaune verdâtre pâle, et paraissait d'un vert pur dans la lunette à eau. Le jaune verdâtre répondait plutôt à $Ve^3\,J^2$ de la planche 16 du *Répertoire chromatique* de Lacouture, le vert pur à $Ve^4\,B^1$ de la planche 17 *ibidem*. En d'autres termes, la différence était la même qu'entre les tons intermédiaires de X à XI et ceux de V à VI de l'échelle Forel.

p. 253 montre comment je procédai pour la détermination. Un prisme équilatéral en verre, dont la monture portait un rayon où étaient disposés les verres colorés, fut installé au-dessus du bout supérieur de la lunette à eau, de manière à ce que l'image des verres colorés coupât en deux celle qu'on voyait dans le tube. Or, avec un peu d'exercice, on arrivait aisément à trouver les plaques de verre dont l'ensemble reproduisait la couleur de l'eau. A chaque passe, on notait les numéros des verres employés, et, de retour à Copenhague, on reproduit sans difficulté les couleurs caractérisant l'eau des divers points. En imitant ces couleurs, surtout en verres carrés, à l'aide des liquides employés par le professeur Forel, on peut se faire un tableau des teintes constatées dans l'eau aux diverses stations de ce voyage, en sorte qu'en y accolant les échantillons respectifs de plankton, on se met à même d'apprécier l'influence que la nature et l'abondance du plankton peuvent avoir sur la couleur.

Pour parvenir à déterminer cette nature et abondance du plankton avec autant de précision que je l'avais fait, à mon sens, pour définir la nuance à l'aide des plaques en verre, j'employai la méthode que voici.

Tout en observant la couleur, je pris un échantillon d'eau, dont je filtrai une certaine quantité, le plus souvent un litre, en l'aspirant au moyen d'une pompe à travers un filtre en papier durci. Ces filtres étaient placés horizontalement entre deux tubes à large collet et ressemblant aux filtres qui servent en chimie pour filtrer de très petites quantités de liquide. On réussit de la sorte à recueillir la totalité du plankton contenu dans la quantité d'eau en question et à la concentrer sur un disque de 12^{mm}, aire assez petite pour permettre la transformation aisée du filtre en préparation au baume du Canada pour l'examen au microscope.

Il va de soi qu'à chaque opération l'on rinçait tant le verre à puiser les échantillons que l'entonnoir d'où l'eau passait au filtre: cette précaution me procura une préparation tout à fait pure, résultat sur lequel il ne faut jamais compter quand on fait resservir souvent le filet à plankton. J'obtins également que tous les organismes présents dans la quantité d'eau filtrée, fussent concentrés en une préparation unique se prêtant à des opérations très exactes tant d'analyse générale que de dénombrement des individus. Comme il n'est ici question ni de râcler le filet ni de le secouer ultérieurement, il arrive souvent que les chapelets de Diatomées sont entiers, soit en fils entrelacés, soit en forme de *piles de monnaie renversées*.

Le papier-filtre *durci* acquiert une grande transparence par immersion dans le baume du Canada; et partant, je pense, il n'y a pas de difficulté particulière à déterminer les espèces connues.

Veut-on se dispenser du papier-filtre, on peut le remplacer par une petite pelote de coton-poudre que traverse l'eau à filtrer et qu'on installe à dessein dans un mince tube de verre inséré dans l'entonnoir. On isole le plankton en dissolvant le coton-poudre dans l'éther acétique, puis en décantant.

Je crois que cette méthode sera d'une importance particulière pour analyser de petites quantités d'eau, celles, par exemple, que la bouteille à eau amène de grandes profondeurs. Quand il faut déterminer la profondeur à laquelle se trouve le plankton et savoir si les organismes, surtout les Diatomées, se dissolvent en descendant vers le fond, je crois qu'on peut difficilement trouver une réponse plus exacte à la question que celle fournie par la présente méthode; car elle prévient pour ainsi dire toute possibilité pour que les organismes étrangers à l'échantillon s'y mélangent et, d'autre part, on peut presque affirmer que chacun des petits organismes présents dans l'échantillon d'eau, doit figurer dans la préparation microscopique.

Ce qui, dans cette cueillette *microscopique* du plankton, est plus manifeste que dans la cueillette ordinaire, c'est le rôle qu'y jouent les impuretés. Par impuretés on entend essentiellement les restes indéfinissables d'animaux et de végétaux morts, ainsi que des matières sécrétées et excrétées. Cependant il faut reconnaître des propriétés nutritives à ces restes et matières tout comme aux animaux et végétaux vivants. Je regarde donc leur exclusion comme non motivée quand on analyse le plankton, car ils font partie intégrante de la masse dans le dosage quantitatif du plankton, tandis que je ne sache pas qu'on y tienne compte dans le dosage qualitatif; souvent même ils entrent en si fortes proportions dans mes préparations pour microscope, que j'ai dû renoncer à mes tentatives de peser dans un trébuchet fort sensible les petits filtres[1]) susmentionnés, car la majeure partie de ce que j'avais sur le filtre consistait en impuretés et en animaux ou végétaux non définissables.

Ces recherches que j'ai faites pourront-elles contribuer à résoudre la question du rapport entre la couleur de l'eau et la nature et

[1]) Mes petits filtres en papier s'obstruant vite, plus tard j'ai employé des filtres en ruban de satin épais.

l'abondance de son plankton? C'est ce qu'on ne peut pas décider avant que j'aie analysé mes nombreuses préparations. Une analyse provisoire faite par M. le Dr Ostenfeld a simplement confirmé la constatation, bien connue, d'une plus grande abondance du plankton dans l'eau d'un vert-jaune intense que dans l'eau bleue. Mais la lunette à eau révèle de nombreuses nuances bleu-vert et bleu-verdâtre, qu'on peut définir avec certitude à l'aide des verres colorés. Ont-elles un rapport déterminé avec la quantité et la nature du plankton? Pour répondre à cette question il faut traiter la substance en question par les pesées et le dénombrement. Ce serait un grand progrès que de pouvoir établir un rapport déterminé; car, en suivant le procédé ci-dessus décrit, on peut définir la couleur de l'eau avec beaucoup de précision et de facilité.

De Godhavn nos rameuses nous menèrent de long des côtes méridionales de Disco et en contournant Vajgat jusqu'à la vallée de Kuganguak qu'il fallait explorer. C'est la plus grande vallée de Disco. Jusqu'alors un seul voyageur y avait pénétré d'une journée de marche; c'était M. Edward Whymper, de Londres, en 1872.

Ayant marché pendant trois jours, nous atteignimes à $22^{km},5$ de l'entrée, et de là nous mesurâmes la distance du fond de la vallée, savoir environ 15^{km} de plus. La longueur totale de cette vallée est donc d'environ $37^{km},5$; on voit descendre dans son fond quatre glaciers, et elle est terminée à peu près au fond par le Nordfjord (pp. 273—76). Sur le versant méridional de la vallée, on trouva dans le pan du rocher, à une hauteur de 4 à 500 mètres, l'andésite à fer métallique dans des conditions analogues à celles d'Asuk. (A propos de cette roche, on voudra bien ce reporter au mémoire que M. le Dr Nicolau a inséré plus haut dans le présent volume, ainsi qu'à la bibliographie citée *ibidem*.) —

De Kuganguak nous rentrâmes à Godhavn le long du littoral, en collectionnant des fossiles des couches crétacées et tertiaires et explorant les glaciers surtout sous le rapport de l'éloignement du rivage et de leur altitude, afin que, lors de nouvelles explorations, on puisse constater si, durant l'intervalle, ils auront retrogradé ou progressé. Pour arriver à ce but, on prit aussi de nombreuses photographies dont quelques-unes sont reproduites dans les planches ci-annexées. Ce qui m'occupa surtout, comme durant mon voyage de 1878—80, ce fut l'état des choses que je dénommai alors „glaciers morts", *todte Gletscher* (voir Heim: *Gletscherkunde*, p. 477). On

en constata l'existence sur plusieurs points de Vajgat; voir, entre autres, pl. XII. Parmi les levés des glaciers, on peut citer:

1° le glacier de Kutdlisat, formé par le confluent de cinq glaciers et qui, mesuré depuis le confluent jusqu'au bout, avait 5000 pas de longueur; au confluent, le glacier avait une altitude de 700 mètres, tandis que l'extrémité du glacier était à 250 mètres de hauteur et avait une puissance de 60 mètres. La crête du rocher qui dépassait le glacier, avait une altitude, d'environ 1450 mètres et le nevé une épaisseur d'environ 20 mètres.

2° Le glacier d'Asuk, situé à la plus méridionale des pointes, se terminait à environ 7000 mètres du rivage et à une altitude de 546 mètres.

3° Le plus méridional des glaciers du Skarvefjeld près de Godhavn, pl. XVI, fig. 1, se terminait à une altitude de 300 mètres, et à 700 pas de ce point on éleva une petite pyramide de pierres.

4° Glaciers du Disco-Fjord. Dans le pan du rocher qui s'étend d'Unartok jusqu'à la baie de Maligiak, il y a sept ou huit *botner*, dépressions encaissées, qui contiennent tantôt des glaciers vifs, c'est-à-dire descendant du haut pays et dont la blancheur révèle leur communication avec le nevé du haut, tantôt des glaciers morts, c'est-à-dire sans communication apparente avec le nevé et tellement masqués par d'abondants dépôts morainiques, que, si on ne voyait pas leur bord escarpé et les taches d'humidité qui le caractérisent, on croirait qu'ils ne contenaient aucun noyau de glace, mais consistaient exclusivement en vieilles moraines terminales. Enfin il y a des *botner* d'où, à ce qu'il semble, le noyau de glace a complètement disparu et où, de fait, il ne reste que des moraines.

Ainsi, dans le *botn* le plus à l'est, il n'y a que peu de neige, et on ne voit aucun glacier sur ses parois presque à pic. Toutefois, la moraine pointue et tacheté d'humidité qui est en aval du *botn*, montre qu'il fut un temps où ce *botn* était traversé par un glacier qui y a laissé encore de ces traces. Le second *botn* ne contient que peu de neige et le glacier semble disparu jusqu'au dernier reste, ne laissant que la moraine. Dans le troisiéme *botn*, il y avait tant de neige et le brouillard importunait tellement, que le regard renseignait mal sur l'état des choses. Au contraire, dans le quatrième *botn*, il y avait un beau glacier, pourtant assez bien recouvert de dépôts morainiques, et que nous baptisâmes la *Tortue* en raison du singulier aspect qu'il présentait vu de loin (voir pl. XV, fig. 1).

Le relevé fit constater que le bord du glacier était à 1486 mètres du rivage suivant l'horizontale et son altitude 168 mètres. Le cinquième *botn* semblait dépourvu de glacier; mais on ne put pas s'en assurer, la neige étant fraîchement tombée. Le sixième *botn*, moins profond, est sans glacier; mais la moraine témoignait qu'il y en avait eu un. Le septième *botn* contient un glacier mort, et est plein de neige; mais la crête du rocher se voit sur toute la longueur, en sorte qu'il n'y a aucune communication avec le nevé du rocher.

Comme il nous aurait fallu faire un assez long détour pour déterminer la distance au rivage et l'altitude de cette extrémité du glacier, on éleva une pyramide de pierres en un point facile à reconnaître et dont la distance à l'extrémité en question fut trouvée de 656 mètres, cette extrémité dominant de 43 mètres d'après la baromètre. Le temps nous manqua pour explorer de plus près le huitième *botn* — il y en a même, peut-être, un neuvième —; en outre, l'abondance des neiges sur les rochers rendait les observations assez incertaines. Le nevé du rocher se révèle de loin comme un sommet aplati qui couvre le quatrième *botn*, ce qui explique commens s'y trouve le plus fort glacier. —

De Godhavn on fit une excursion au Disco-Fjord, et de là nous passâmes au Mellemfjord sur la côte orientale de Disco. C'est là qu'on découvrit la plus chaude des sources jusqu'ici rencontrées dans le Nord du Grönland, car sa température était de 18°,8 centigrades.

L'illustration page 292, relative à ce même fjord, montre une série de pierres qu'en Grönland les indigènes appellens *nangisat*[1]). Ce seraient les Grönlandais qui les auraient plantées pour un jeu actuellement tombé dans l'oubli et consistant à sautiller sur un pied d'une pierre à l'autre sur toute la rangée. On comptait 44 de ces pierres et leur distance variait un peu; le plus souvent elle était de 1 mètre à 1^{m},50.

Comme matériaux servant à déterminer désormais si le niveau des eaux a changé sur le littoral, on pratiqua en divers endroits un nivellement faisant connaître la hauteur d'un point facile à repérer au-dessus de la lisière supérieure formée par des Fucacées. C'est ce qu'on fit à Kudtlisat (voir p. 267), à Ujaragsugsuk (p. 281), à Erkigtok (p. 301) et à Godhavn (p. 302).

---

[1]) *Communic. s. le Grönland.* VIII, p. 111.

Explication des Planches IX—XVII.

Planche IX.

Côte septentrionale de Disco entre Isunguak et Nugarsuk.

Le rocher de gauche est Isunguak et celui du milieu qui fait la pointe est Ingisok. La langue de terre d'où l'on a pris cette vue, est Nugarsuk. Ces deux rochers sont presque égaux de hauteur, soit environ 875 mètres. Dans le talus bas près de leau, les formations carbonifères sont à nu, et comme, à Isunguak, le schiste se trouve fortement refoulé, ce talus doit sans doute se composer exclusivement de sable et de grès. Les petits dykes basaltiques, plus ou moins verticaux, y sont communs. La rampe uniforme qu'on voit au-dessus est légèrement couverte de végétaux et revêtue de la couche mince assez souvent mentionnée dans le texte et consistant en parties d'argile à blocaux à blocs des roches primitives. Les portions d'un blanc vif sont les lits de sable et de grès dénudés dans les innombrables ravins. Le basalte y figure en puissants filons horizontaux ressemblant à des couches, comme on le voit à Isunguak et sous le sommet de l'Ingisok. Les couches supérieures se composent de trapp, mais leur limite inférieure et indécise, cachée comme elle l'est sous de puissants tas de blocs basaltiques éboulés, et tout en haut le nevé recouvre les cimes et nivelle les dépressions.

Planche X.

Houillère de Ritenbenk à Disco.

Cette falaise atteint une hauteur de 50 mètres et consiste en un alternat de grès et de schiste; c'est ce dernier qui contient les couches à houille. Concernant cette falaise, voir le profil schématique que j'ai relevé en 1872 et qu'on trouve dans la planche IX des *Vidensk. Medd. fra den Naturhist. Forening i Kbhvn.*, 1874. Sur cette même falaise s'étend, comme on l'a dit à propos de la pl. IX, la rampe argileuse et couverte de végétation, qui monte jusqu'aux rochers du haut, rampe assez escarpée et qui dépasse 1000 mètres. Le premier plan est rempli de morceaux détachés d'andésite contenant du fer metallique et du graphite et qui s'est fait jour ici au travers des dépôts carbonifères pour former la pointe peu saillante de Nungerut, d'où l'on a pris cette vue.

Planche XI.

Andésite à fer metallique d'Asuk.

La moitié inférieure de cette vue présente un tuf à part contenant quantité de fragments d'andésite à fer metallique. En montant, on trouve, fendillé en belles colonnes, un basalte qui, sous formes de filons, s'est fait jour, en partie entre ce tuf et une couche d'andésite à fer metallique; quelques restes de cette dernière sont encore visibles dans le haut. En cet endroit, la fallaise a près de 40 mètres de hauteur.

Planche XII.

Extrémité du glacier mort d'Unartok en Vajgat.

La vue représentée est traversée par cette extrémité que masquent tout à fait des dépôts morainiques. Au milieu, un peu à gauche, on voit la vraie moraine que le glacier laisse quand la fonte le fait disparaître.

Planche XIII.

Fig. 1. *Rocher trappéen à Erkigtok dans le Disco-Fjord.*

Cette illustration reproduit l'aspect caractéristique des roches trappéennes des régions méridionales et occidentales de Disco. Ce sont des couches alternantes d'un basalte compact et d'une amygdaloïde assez poreuse, le plus souvent rouge; ces couches sont séparées par une argile rouge provenant sans doute de l'efflorescence de la roche amygdaloïde. En général elles sont horizontales. Le rocher est haut d'environ 700 mètres.

Fig. 2. *Najanguit, rocher de tuf basaltique à Kuganguak, Vajgat.*

Ce petit „rocher aux mouettes", situé sur le versant oriental de la vallée de Kuganguak, consiste en tuf basaltique et son aspect caractérise les rochers du côté occidental de Disco. Ce tuf est composé d'un conglomérat dur et homagêne ou masse bréchiforme rappelant la forme d'un banc, et ces bancs descendent souvent en différents sens. La hauteur du rocher est d'environ 450 mètres.

Planche XIV.

Fig. 1. *Argile à bloccaux stratifiée. Kutdlisat, Vajgat.*

Comme on l'a souvent dit dans ce mémoire, les versants qui vont mourir le long des côtes, présentent une moraine argileuse mêlée de blocs erratiques, dont beaucoup émanant de la roche primitive sont étrangers à cette partie de Disco et doivent provenir du continent situé à l'est. La glace a dû les apporter en traversant le détroit de Vajgat et contournant Disco par le sud. Dans les moraines locales, émises par les glaciers qui partent actuellement de Disco ou qui l'ont fait antérieurement, on ne trouve jamais de blocs erratiques provenant de la roche primitive.

Fig. 2. *Cavités de kryokonite du glacier de Kutdlisat.*

Dans le temps, M. A.-E. Nordenskiöld désignait par kryokonite les fines particules argileuses qui s'amassent dans les dépressions et cavités de la glace continentale. Ces cavités ont quelquefois une forme très régulière et caractéristique. Si dans l'illustration elles ont l'air d'affecter la direction radiaire au lieu d'être perpendiculaires à la surface, la cause en est dans une imperfection de la photographie. Ces cavités étant profondes et étroites, il faillait braquer l'appareil presque verticalement, et la distance étant forcément courte, il en résulta une torsion légère de l'image.

Planche XV.

Fig. 1. *Glacier du quadrième botn (vu de l'est) dans le rocher qui domine Unartok dans le Disco-Fjord.* Voir page 300.

Fig. 2. *Glacier de Kugssuak entre Sinigfik et Puilasok sur le littoral sud de Disco.* Voir page 283.

Planche XVI.

Fig. 1. *Le plus méridional des glaciers sur le versant oriental du Skarvefjeld.* Voir page 284.

Fig. 2. *Glacier presque le plus au sud, dans la région orientale du Lyngmarksfjeld.* Voir page 284.

Fig. 3. *Extrémité du plus méridional des glaciers du côté oriental du Lyngmarksfjeld.* Voir page 284.

Planche XVII.

Fig. 1. *Glacier de Kutdlisat. Vajgat.* Dessin de M. H. Moltke. Voir page 266.

Fig. 2. *Glacier de Kagsimavik. Disco-Fjord.* Dessin de M. H. Moltke. Voir page 286.

Fig. 3. *Vue de montagnes avec glaciers. Pays haut à l'intérieur du Flakkerhuk.* Dessin de M. H. Moltke. Voir page 262.

Remarques sur le planches XVIII, XIX et XX, ainsi que sur l'annexe coloriée.

Le détroit de Vajgat a plus de 100 kilomètres de longueur, et sa largeur varie de 10 à 20 km.; l'altitude de ces côtes est entre 800 et 2000 mètres. — Il est difficile d'envisager l'ensemble de ces murailles de rochers; aussi, dès ma première visite, en 1871, pus'je me convaincre d'emblée que, pour obtenir un résultat scientifique satisfaisant de l'étude des formations très intéressantes qu'on rencontre là, il faudrait dresser une carte répondant exactement au but et dessiner ces pans rocheux; après quoi l'on pourrait y adapter les diverses observations. — M. J.-G. Rohde, ancien élève de l'école Polytechnique, avec qui je refis le voyage en 1872, dressa alors une carte côtière du Vajgat et, malgré son manque total de pratique, malgré la pauvreté de tous les instruments dont nous disposions, l'exécution fut si bonne, que la carte dressée en 1880 par M. R.-R. Hammer, lieutenant de vaisseau, ne s'écartait en aucun point essentiel de celle de Rhode, bien que cet officier fût fort habile cartographe et armé d'excellents instruments. La carte de Rhode fut publiée dans les *Petermanns Mittheilungen* de 1874; celle de Hammer dans les *Comm. s. le Gr.* IV, et, de plus, insérée dans la collection des cartes sur le Grönland du Dépôt des cartes et plans de la Marine. Durant notre voyage de 1880, le lieutenant Hammer dessina en outre les côtes de Vajgat: au fur et à mesure que nous avancions, il dessinait le paysage côtier qui s'offrait de l'autre côté. Quant à dessiner la côte que nous longions, c'eût été impossible en raison de la hauteur et de l'escarpement des rochers, vu aussi l'étroitesse de la côte. C'est sur cette base qu'on reproduit, planches XVIII et XIX, le littoral nord-est de Disco, et l'on trouve indiqué en dessous de quels points de la presqu'île de Nugsuak sont vus les divers sites. La sinuosité de la côte et l'impossibilité, due

à différentes causes, de choisir les points les plus absolument favorables, ont empêché de rajuster en un ensemble les cinq profils qui s'étendent d'Isunguak dans la direction de Kuganguak, mais il faut les étudier chacun à part. Il y avait dans nos conditions de travail un autre point défavorable, mais indépendant de notre volonté, savoir la disparité résultant forcément de ce que Disco était presque enterré sous la neige lorsque, le 28 mai, Hammer releva le littoral d'Isunguak à Ujaragsugsuk. A mesure que nous procédions vers l'ouest, la neige fondait sur les rochers, en sorte que, le 30 juin, quand il dessina le paysage situé le plus à l'ouest, la neige d'hiver avait complètement disparu. Il en résulte un certain manque d'homogénéité dans le ton et les contours, ce qui n'est pas heureux pour la vue d'ensemble. La planche XX contient deux dessins de côtes faits par M. Hammer le 13 juillet dans l'île de Hareö, et qui représentent, l'un le littoral de la presqu'île de Nugsuak, de puis Nugsuak jusqu'à Kakarsuak situé au débouché du détroit de Vajgat, l'autre la côte nord-ouest de Disco depuis Kuganguak jusqu'à Igdlorpait.

M. Hammer dessina aussi la côte de la presqu'île de Nugsuak vue de Disco; mais on n'a pas reproduit ces dessins, parceque dans l'intervalle on a réussi à donner de ce littoral une aquarelle dont l'effet est d'animer le paysage et d'en rendre l'idée plus nette. Cette image, qu'on trouve dans l'annexe, a été peinte par un artiste, M. le comte Harald Moltke, durant le quinzaine du 16 au 29 juillet 1899 que nous passâmes à la côte de Disco entre Narsak et Kuganguak. D'ailleurs, cette image a été faite, comme celle de Hammer, en plusieurs fragments et de divers points, toutefois en sorte qu'on a eu une vue d'ensemble. Cette grande différence de largeur du Vajgat, savoir c. 20 km. à l'extrémité orientale et c. 10 km. à celle de l'ouest, a pour conséquence de rendre les rochers de l'entrée par l'est moins accentués que ceux de l'autre extrémité, bien que la hauteur soit à peu près la même.

N'ayant pas eu, en 1898, l'occasion d'explorer la presqu'île de Nugsuak, je n'ai rien à ajouter à ce que j'y ai vu et observé lors de mes premiers voyages et dont j'ai rendu compte dans le *Communications sur le Grönland,* IV et V. Je me borne aux remarques suivantes sur les teintes de l'image en question: les parties claires et jaunes prédominent dans l'extrémité orientale du profil, mais on ne les en voit pas moins çà et là sur presque tout le littoral; elles représentent le sable jaune clair et les couches de grès des dépôts

carbonifères. La cause de cette plus forte dénudation de ces dépôts dans l'est que dans l'ouest de la contrée, est-elle un plus fort déplacement de la glace vers les points où l'angle oriental de Disco se trouve aujourd'hui et où, par conséquent, cette glace aurait enlevé par érosion de plus grandes quantités du trapp qui recouvrait ces taches qu'à l'extrémité occidentale du Vajgat où le glacier a peut-être cheminé dans un lit plus tranquille? ou bien la puissance de la couche du trapp protecteur a-t-elle été moindre à l'est? C'est là le sujet d'une investigation plus minutieuse. A Patoot et à Ata, ces formations jaunes prennent une teinte rougeâtre, due à la calcination du schiste et du grès [1]). Si les dépôts carbonifères s'offrent moins à la vue à l'extrémité orientale de la côte, c'est aussi parce que les éboulis', les *rouser*, comme on les appelle au Grönland, y sont plus puissants et y cachent fréquemment le pied des rochers jusqu'à une hauteur de plusieurs centaines de mètres. Au-dessus des dépôts carbonifères jaunes, on voit la couche gris-sombre du trapp; enfin, tout à fait en haut et épars ça et là, comme à Patoot, brillent les dômes blancs de la neige éternelle. On ne voit aucun glacier sur cette côte. Le dessin représente les hauts rochers plus chargés de neige que sans doute ils ne le sont généralement à cette époque de l'année; mais, en 1898, nous eûmes un brouillard presque continuel durant notre séjour au Vajgat, et, toutes les fois que la brume s'éloignait, on voyait les sommets des rochers couverts de neige nouvellement tombée.

[1]) *Communic. sur le Gr.* V, pages 64 et 215.

V. Forsteningerne i Kridt- og Miocenformationen i Nord-Grønland ved **Steenstrup, O. Heer** og **de Loriol.** Med 2 Tav. og 1 Kort. 1883. Andet Oplag. 1893. Kr. 6.

VI. Forberedelser til Undersøgelsen af Grønlands Østkyst ved **Wandel** og **Normann,** og Undersøgelse af Ruinerne i Julianehaabs Distrikt 1880 og 1881 ved **G. Holm.** Med 35 Tav. og 2 Kort. 1883. Andet Oplag. 1894. Kr. 6.

VII. Undersøgelser af Grønlandske Mineralier ved **Lorenzen** og **Rørdam**; de hydrografiske Forhold i Davis-Strædet ved **Wandel**; entomologiske Undersøgelser ved **Lundbeck**; Bemærkninger til Kortet fra Tiningnertok til Julianehaab af **Bloch**; Bidrag til Vestgrønlændernes Anthropologi ved **Søren Hansen.** Med 14 Tavler og 2 Kort. 1882—93. Kr. 6.

VIII. Undersøgelser i Distrikterne ved Disko-Bugten, i Holstensborgs, Sukkertoppens, Godthaabs og Upernivik Distrikter i Aarene 1883—1887 ved **Hammer, Jensen, Ryder, Lange, Warming, Th. Holm, Rørdam, Rink** og **Carlheim-Gyllenskiöld.** Med 21 Tav. 1889. Kr. 6.

IX—X. Den østgrønlandske Expedition i Aarene 1883—1885 (Angmagsalik) ved **G. Holm, V. Garde, Knutsen, Eberlin, Steenstrup, S. Hansen, Lange, Rink, Villaume-Jantzen** og **Crone.** Med 59 Tavler. 1888—89. Kr. 20.

XI. The Eskimo tribes, their distribution and characteristics, especially in regard to language. Af Dr. **H. Rink.** Med et Supplement og 1 Kort. 1887—91. Kr. 7.

XII. Om Grønlands Vegetation af **Eug. Warming.** 1888. Kr. 3.50.

XIII. Bibliographia Groenlandica ved **P. Lauridsen.** 1890. Kr. 3.50.

XIV. Undersøgelser af Grønlandske Nefelinsyeniter af **N. V. Ussing.** Mineralogiske Undersøgelser i Julianehaab-Distrikt af **Gust. Flink.** Undersøgelser i Egedesminde-Distrikt i 1897 af **Frode Petersen, Helgi Pjetursson** og **C. Kruuse.** Med 12 Tavler. 1898. Kr. 8.

XV. Bidrag til Vest-Grønlands Flora og Vegetation af **N. Hartz** og **L. Kolderup Rosenvinge.** Mosser fra Øst-Grønland af

C. Jensen. Diatoméer af **E. Ostrup.** Forekomst af Cohenit i tellurisk Jern ved Jakobshavn af Dr. **E. Cohen.** Med 2 Tavler. 1898. Kr. 8.

XVI. Undersøgelser i Julianehaabs Distrikt 1893 og 1894. Skjærgaardsopmaaling, Undersøgelse af Indlandsis og Bræer, Misvisning m. m. ved **V. Garde, C. Moltke** og **A. Jessen.** Arkæologiske Undersøgelser af **D. Brunn, F. Petersen** og **V. Boye.** Med 20 Tavler. 1896. Kr. 10.

XVII—XIX. Den østgrønlandske Expedition i Aarene 1891—92 (Scoresby-Sund) ved **C. Ryder, H. Vedel, N. Hartz, E. Bay, H. Deichmann, C. Christiansen, Willaume-Jantzen, Rørdam, S. Hansen, Børgesen, Rostrup, Deichmann Branth, Østrup, Posselt, Lundbeck, H. Hansen, Wesenberg-Lund** og **Lundgren.** Med 40 Tavler. 1895—96. Kr. 25.

XX. Grønlands Alger, Flora og Vegetation af **L. Kolderup Rosenvinge.** Om Steenstrupin af **Joh. Chr. Moberg.** Grønlands gamle Topografi af **Finnur Jónsson.** Brade Ransons Forde af **Frode Petersen.** Med 3 Tavler. 1899. Kr. 6.

XXI, *1ste Afdeling:* Grønlands Fugle af **Herluf Winge.** Med 1 Kort. 1899. Kr. 4,50.

XXIII, *1ste Afdeling:* Grønlands Brachiopoder og Bløddyr af **Henr. J. Posselt** udgivet efter Forfatterens Død ved Ad. S. Jensen. Med 2 Tavler og 1 Kort. 1899. Kr. 4,50.

XXIV. Undersøgelser af Mineraler fra Julianehaab af **G. Flink, N. B. Boggild** og **Chr. Winther** med indledende Bemærkninger af **N. V. Ussing.** Untersuchungen an den eisenführenden Gesteine der Insel Disko von Dr. **Th. Nicolau.** Beretning om en Undersøgelsesrejse til Øen Disko 1898 af **K. J. V. Steenstrup.** Med 20 Tavler og et særskilt heftet Farvetryk. 1901. Kr. 6,50.

Med de fleste Hefter følger en *Résumé des Communications sur le Grönland.*

Tillæg til V. Afbildninger af Grønlands fossile Flora ved **Oswald Heer.** 4°. Med Titelkobber, 100 Tav. og 1 Kort. 1883. Kr. 30. Udsolgt.

THE NEW YORK PUBLIC LIBRARY
REFERENCE DEPARTMENT

This book is under no circumstances to be taken from the Building

Form 410